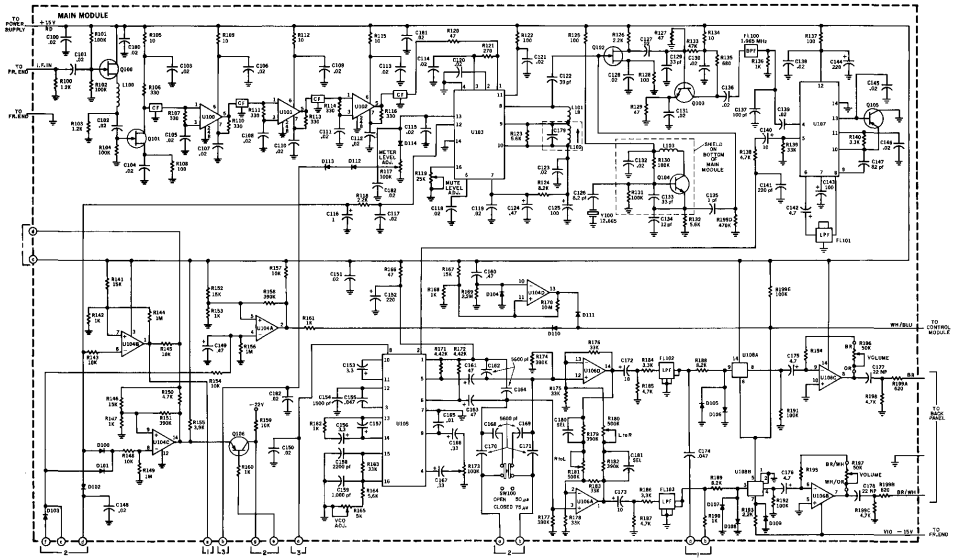

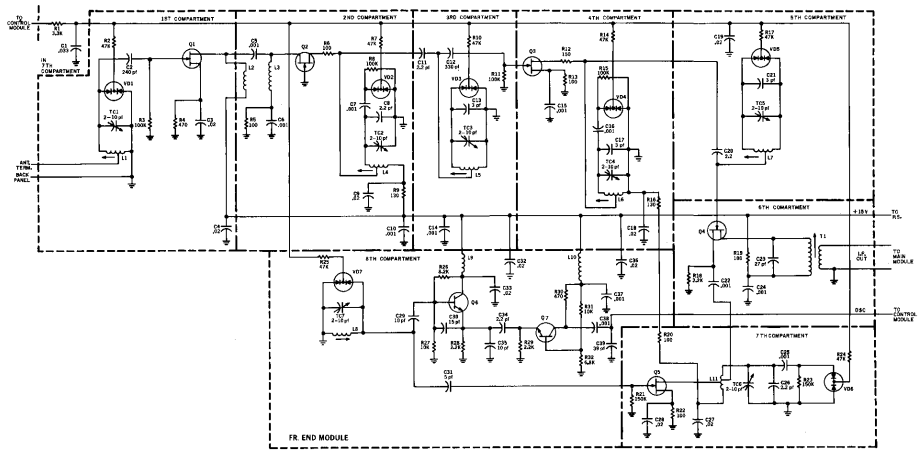

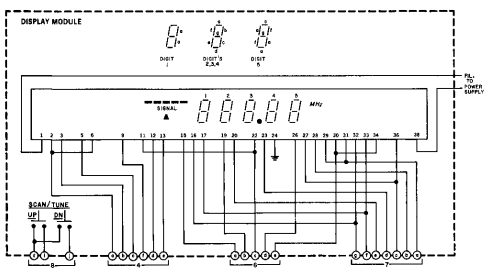

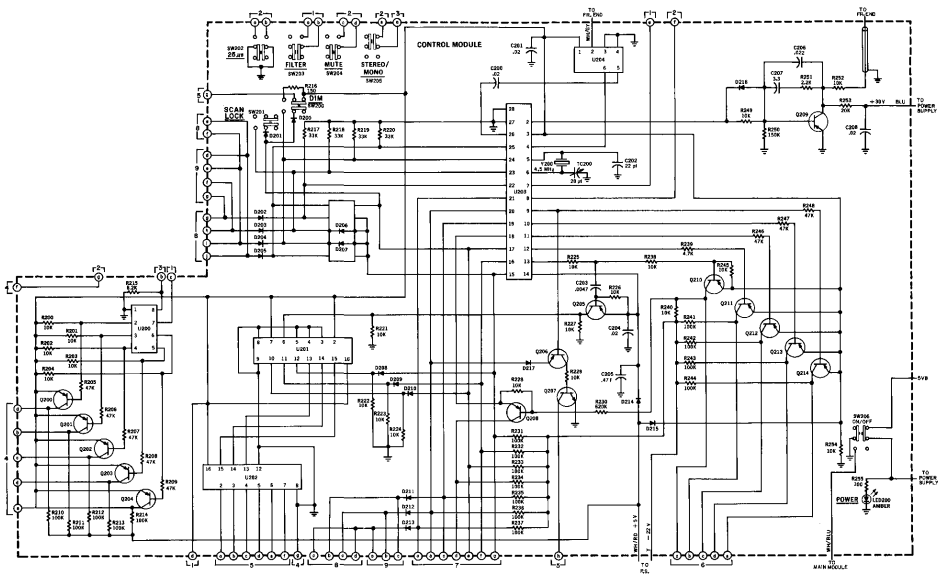

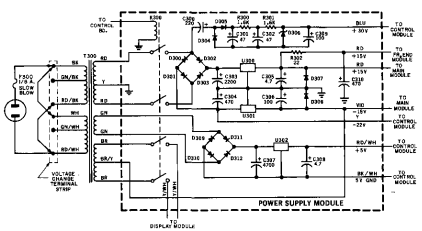

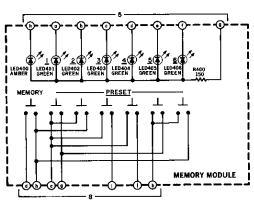

FM TWO SCHEMATIC NOTES

- ALL RESISTORS ARE IN OHMS, ALL CAPACITORS IN MICROFARADS UNLESS OTHERWISE DESIGNATED.
- ALL RESISTORS ARE .25 WATT, 5% TOLERANCE UNLESS OTHERWISE DESIGNATED.
- ALL SWITCHES IN THE NORMAL POSITION.

FM TWO SCHEMATIC