AM/FM STEREO TUNER

TX-6700
TX-606

SERVICE MANUAL

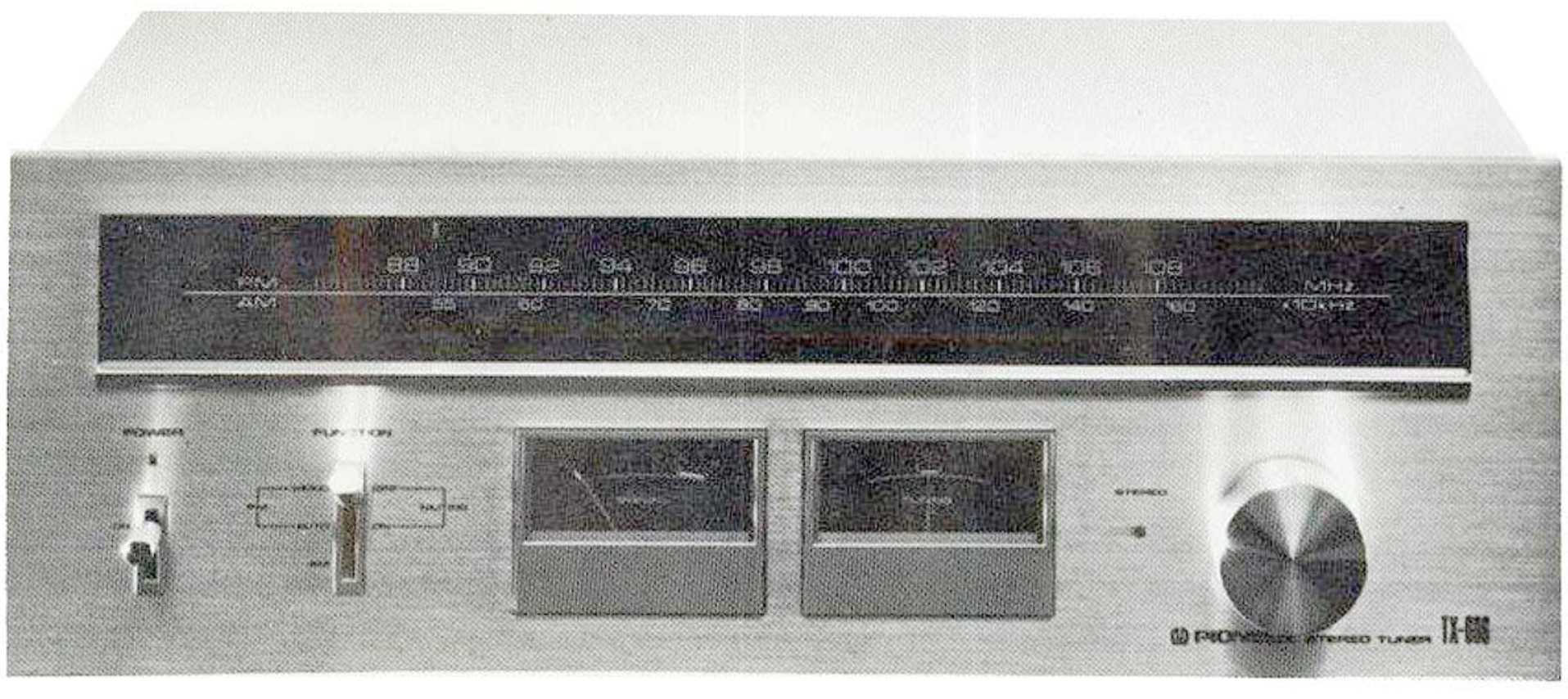

PIONEER®

APPEARANCE OF TRANSISTORS AND ICs

HA 1197
PA1001-A
PA3001-A

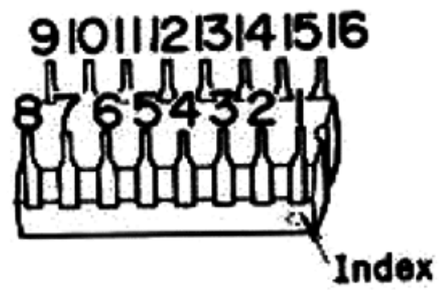

2SC535
2SC461

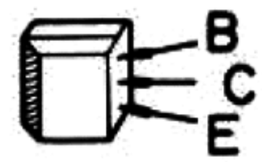

2SK61

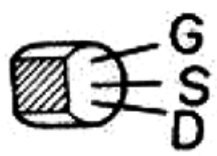

2SC945A

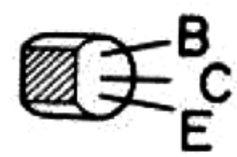

2SA725

2SC1384

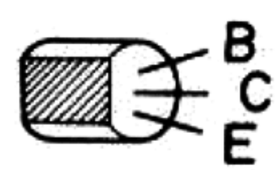

Circuit Diagram of IC

HA1197

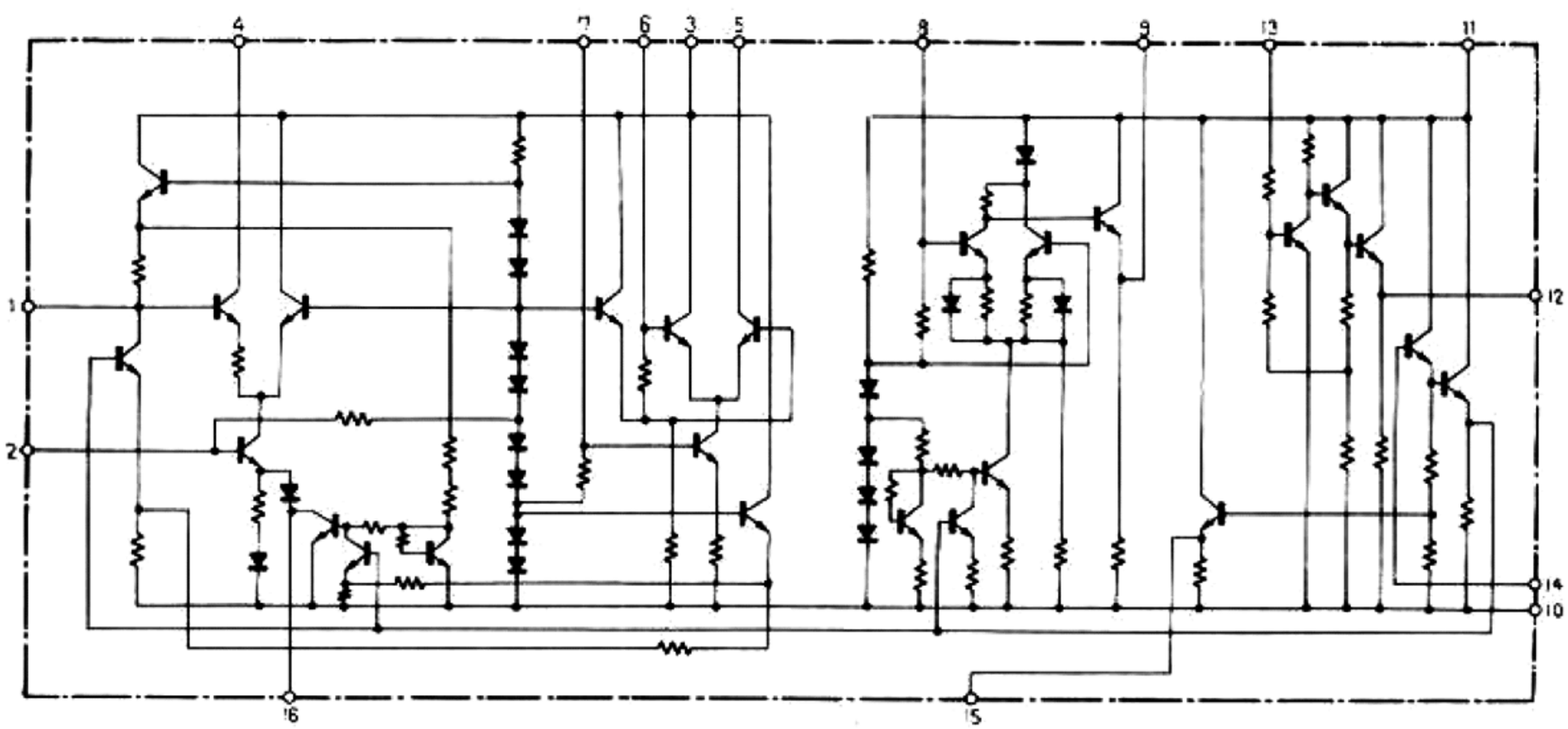

SCHEMATIC DIAGRAM

NOTE:
The indicated semiconductors are representative ones only. Other alternative semiconductors may be used and are listed in the parts list.

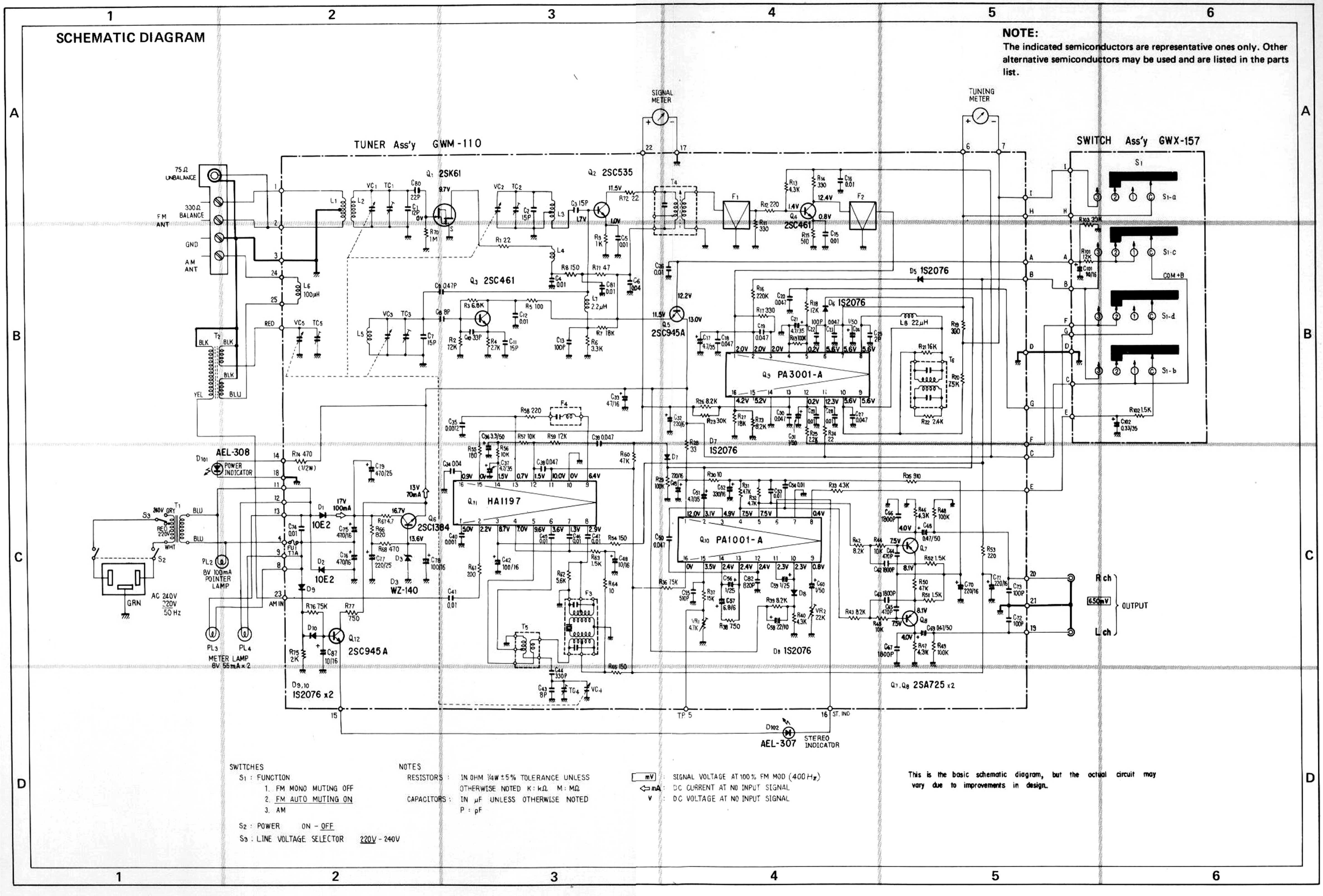

SWITCHES
S1 : FUNCTION
1. FM MONO MUTING OFF
2. FM AUTO MUTING ON
3. AM
S2 : POWER ON - OFF
S3 : LINE VOLTAGE SELECTOR 220V - 240V

NOTES
RESISTORS : IN OHM ¼W ±5% TOLERANCE UNLESS OTHERWISE NOTED K : kΩ M : MΩ
CAPACITORS : IN μF UNLESS OTHERWISE NOTED P : pF

mV : SIGNAL VOLTAGE AT 100% FM MOD (400 Hz)
mA : DC CURRENT AT NO INPUT SIGNAL
V : DC VOLTAGE AT NO INPUT SIGNAL

This is the basic schematic diagram, but the actual circuit may vary due to improvements in design.

TUNER ASSEMBLY (GWM-110)

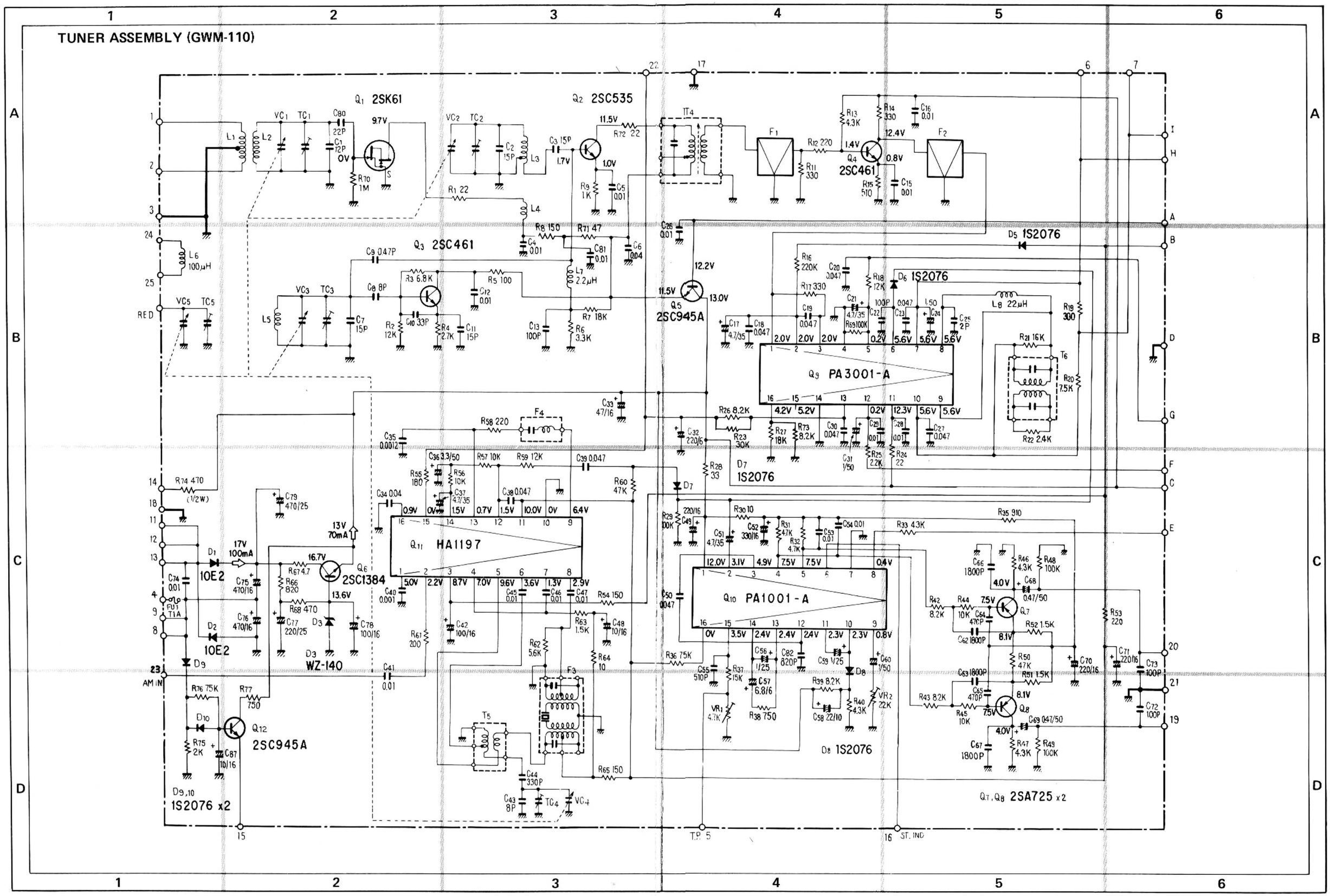

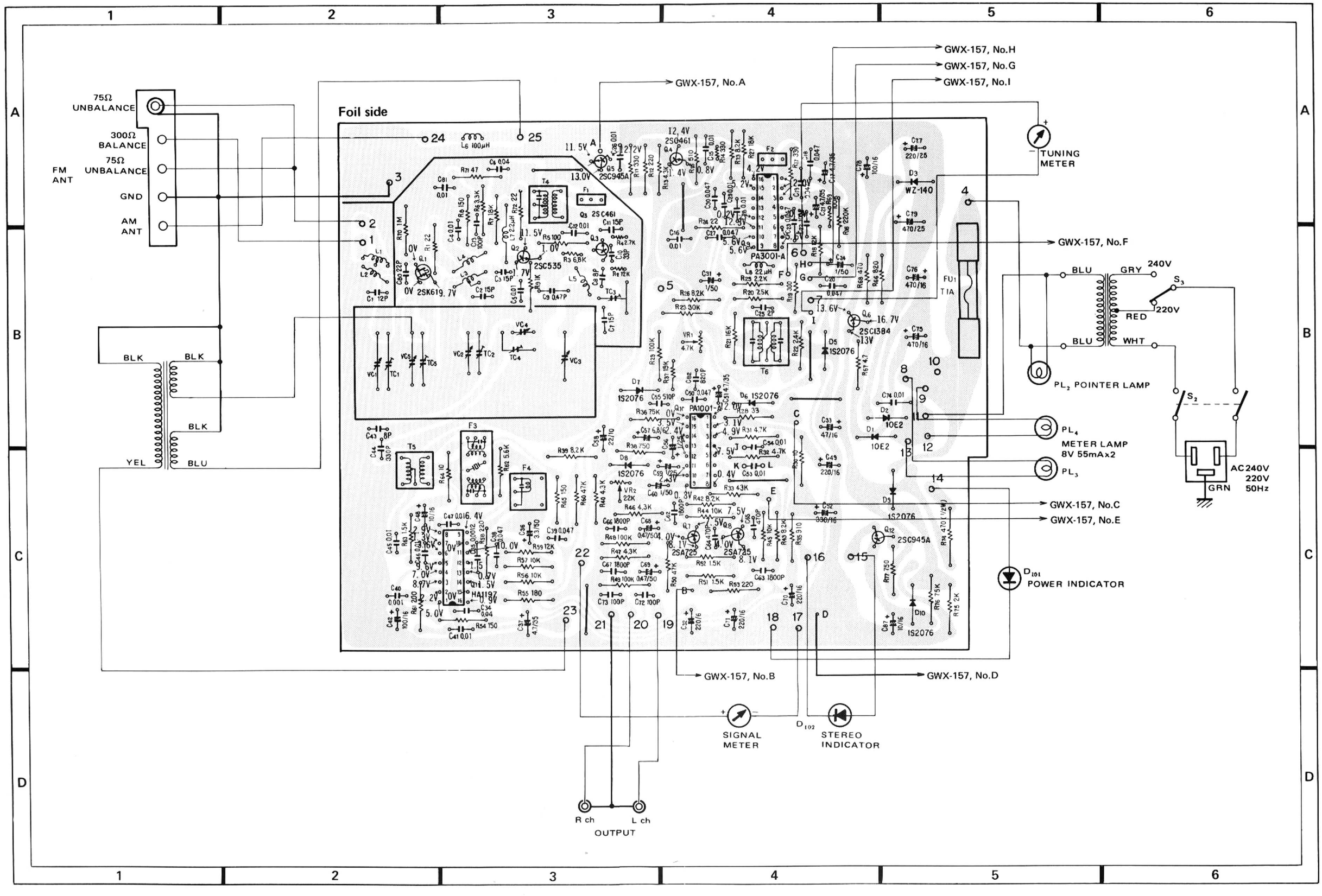
Foil side
75Ω UNBALANCE
300Ω BALANCE
75Ω UNBALANCE
FM ANT
GND
AM ANT
BLK
BLK
BLK
YEL
BLU
GWX-157, No.A
GWX-157, No.H
GWX-157, No.G
GWX-157, No.I
GWX-157, No.F
GWX-157, No.C
GWX-157, No.E
GWX-157, No.B
GWX-157, No.D
TUNING METER
FU1 T1A
BLU
GRY
240V
RED
220V
BLU
WHT
PL2 POINTER LAMP
PL4
METER LAMP 8V 55mAx2
PL3
AC240V 220V 50Hz
GRN
D101 POWER INDICATOR
SIGNAL METER
D102
STEREO INDICATOR
R ch
L ch
OUTPUT

SWITCH ASSEMBLY (GWX-157)

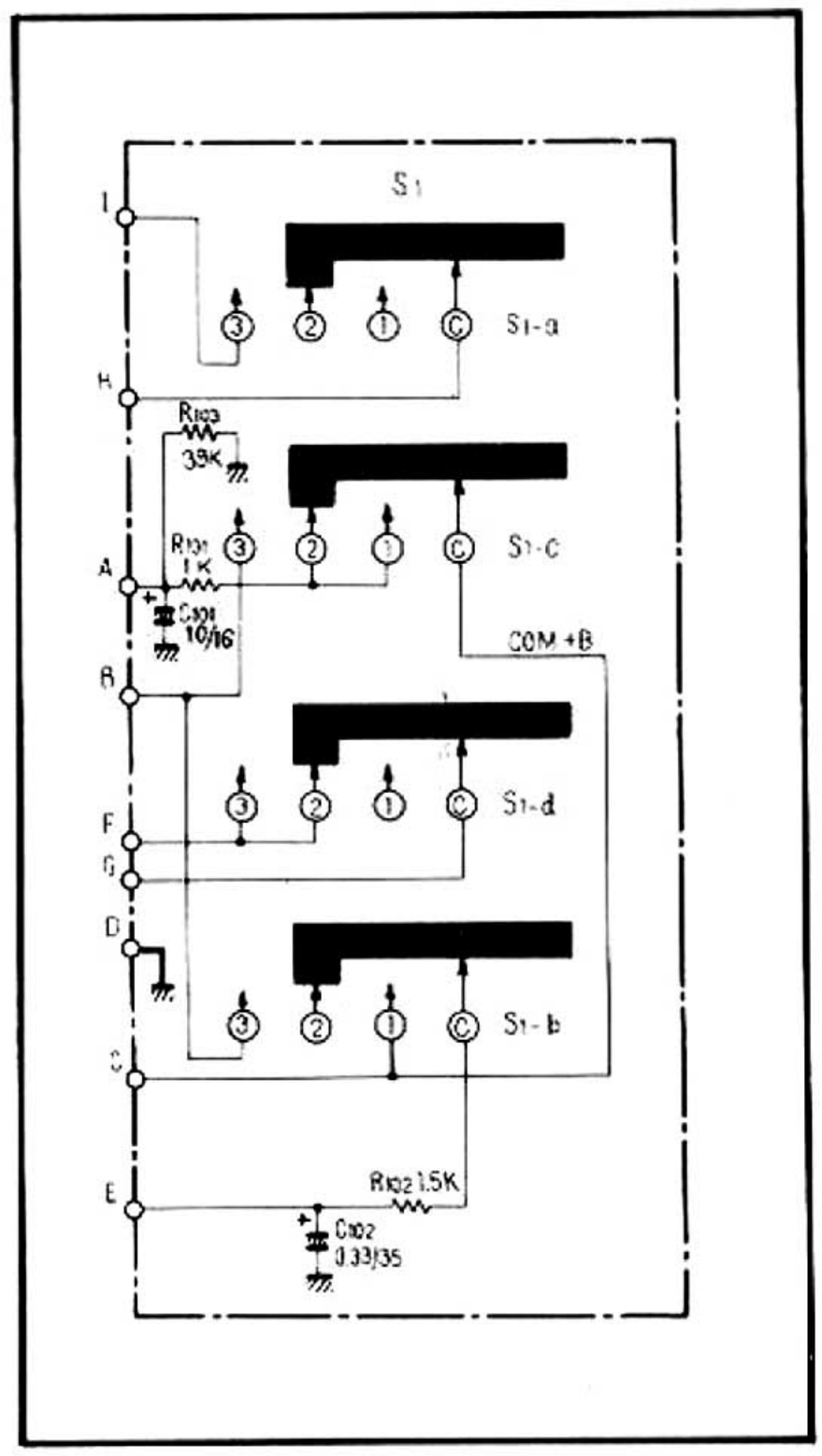

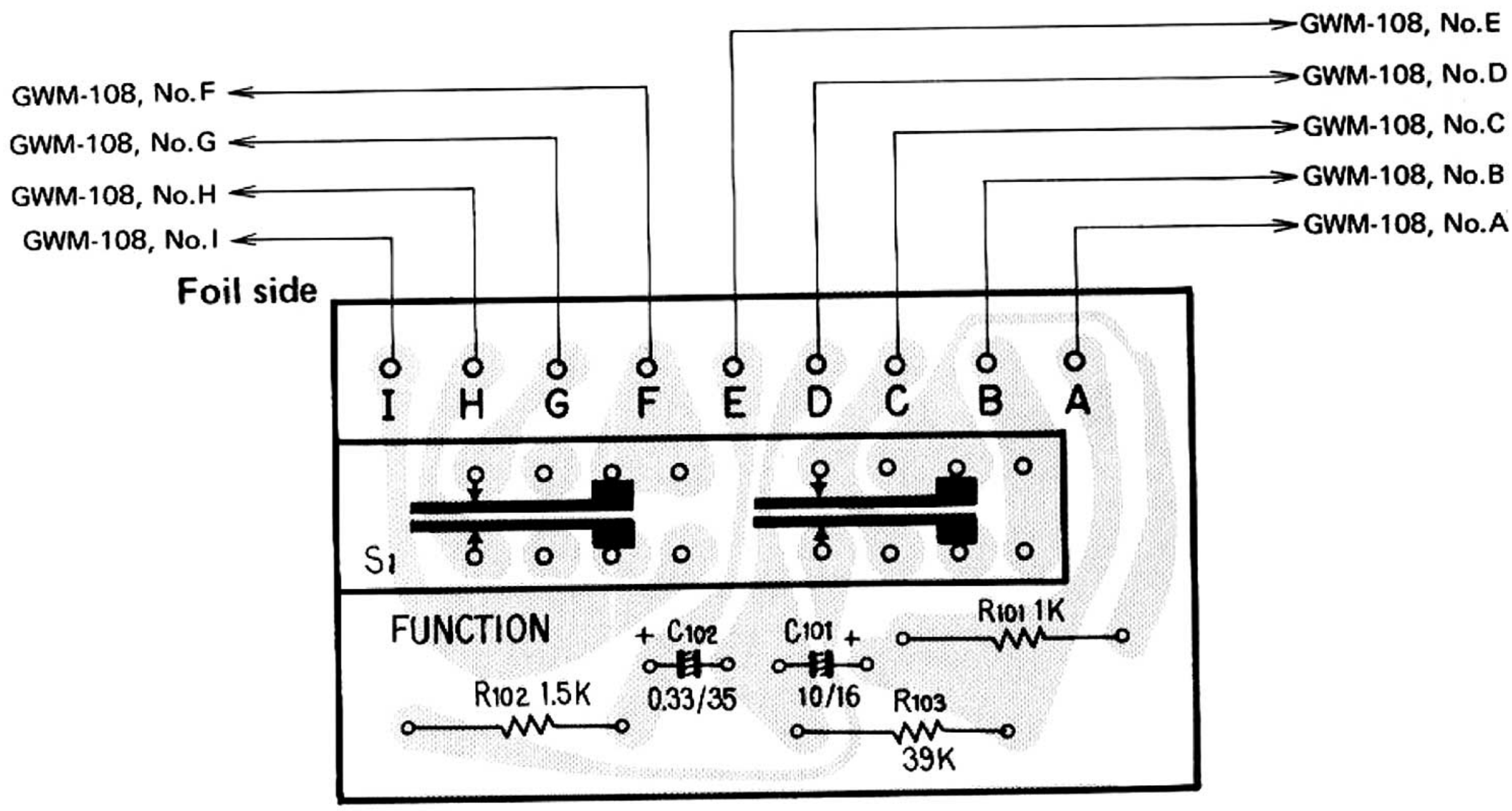

PIONEER® -SERVICE

Telefon 04 21 / 3 16 91

Versandanschrift: Pioneer-Melchers GmbH, Flughafendamm 9, 2800 Bremen 1

Service-Leitung	**04 21 / 31 69 278**
Werkstatt Reparaturen Reparaturhilfen	**04 21 / 31 69 279**
Ersatzteile Ersatzteilbestellungen Technische Unterlagen	**04 21 / 31 69 277**

PIONEER-Melchers GmbH
Service

PIONEER-Melchers GmbH

Schlachte 39/40, 2800 Bremen 1 Postfach 10 25 60,

PIONEER ELECTRONIC CORPORATION

4-1, Meguro 1-chome, Meguro-ku, TOKYO, 153, JAPAN

PIONEER ELECTRONICS OF AMERICA

1925E, Dominguez ST. Long Beach, Calif. 90810

PIONEER ELECTRONIC (EUROPE) N.V.

Luithagen-Haven 9, 2030 Antwerp, Belgium

PIONEER ELECTRONICS AUSTRALIA PTY. LTD.

178-184 Boundary Road, Braeside, Victoria 3195, Australia