ST-JX5

AEP Model
UK Model

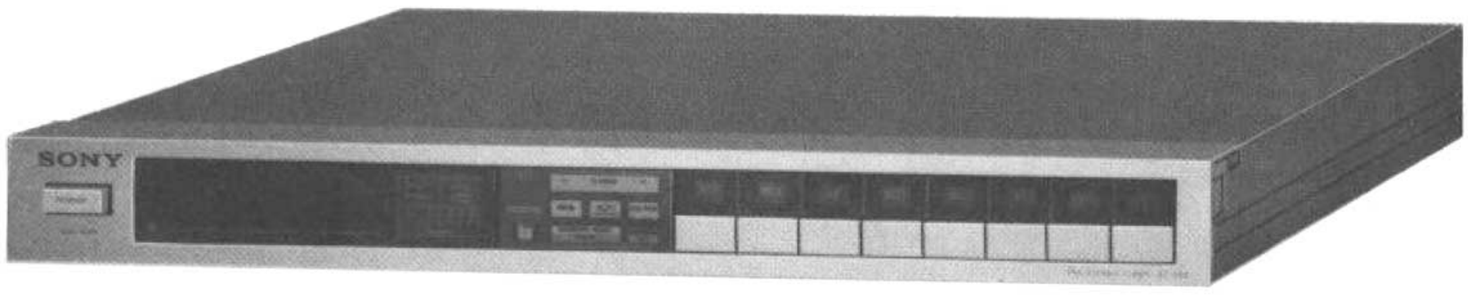

QUARTZ

FM STEREO TUNER

SPECIFICATIONS

GENERAL

Power Requirements: 220 V ac ~ (or 240 V ac ~ adjustable by authorized Sony personnel), 50/60 Hz (AEP model)
240 V ac ~ (or 220 V ac ~ adjustable by authorized Sony personnel), 50/60 Hz (UK model)

Power Consumption: 13 W

Dimensions: Approx. 430(w) x 55(h) x 305(d) mm
17(w) x $2^1/_4$(h) x 12(d) inches
including projection parts and controls

Weight: Approx. 3.6 kg (7 lbs 15 oz) net
Approx. 4.1 kg (9 lbs 6 oz) in shipping carton

TUNER SECTION

Tuning Range: 87.5 MHz – 108 MHz

Antenna Terminals: 300 ohms, balanced
75 ohms, unbalanced coaxial input

Intermediate Frequency: 10.7 MHz

Sensitivity at 46 dB Quieting (40 kHz deviation): 4 μV (mono)
43 μV (30 μV)* (stereo)

Usable Sensitivity: 1.4 μV (S/N = 26 dB, 40 kHz deviation)
1.8 μV, 10.3 dBf (IHF)

Limiting Threshold: 1 μV

Signal-to-noise Ratio: 83 dB (mono), 77 dB (stereo) at 40 kHz deviation

Harmonic Distortion: (40 kHz deviation)
0.06% (mono), 0.08% (stereo) at 100 Hz
0.06% (mono), 0.08% (stereo)at 1 kHz
0.08% (mono), 0.12% (stereo) at 10 kHz

IM Distortion (40 kHz deviation): 0.06% (mono), 0.08% (stereo)

Separation: 50 dB at 100 Hz
55 dB (17 dB)* at 1 kHz
40 dB at 10 kHz

Frequency Response: 40 Hz – 12.5 kHz ±0.2 dB
30 Hz – 15 kHz $^{+0.2}_{-0.5}$ dB

Selectivity: 80 dB at 300 kHz

Capture Ratio: 1.0 dB

AM Suppression Ratio: 65 dB

– Continued on page 2 –

SAFETY-RELATED COMPONENT WARNING!!

COMPONENTS IDENTIFIED BY SHADING AND MARK ⚠ ON THE SCHEMATIC DIAGRAMS, EXPLODED VIEWS AND IN THE PARTS LIST ARE CRITICAL TO SAFE OPERATION. REPLACE THESE COMPONENTS WITH SONY PARTS WHOSE PART NUMBERS APPEAR AS SHOWN IN THIS MANUAL OR IN SUPPLEMENTS PUBLISHED BY SONY.

MICROFILM

SONY®

SERVICE MANUAL

www.hifiengine.com

Image Response Ratio:	85 dB
IF Response Ratio:	100 dB
Spurious Response Ratio:	100 dB
RF Intermodulation:	78 dB (IHF), 90 dB (2.4 MHz)
Sub-carrier Product Ratio:	65 dB
Muting and Auto-tuning Threshold:	Approx. 10 μV, 25.2 dBf
Output Level/ Impedance (75 kHz deviation):	750 mV, 600 Ω
Calibrating Tone Level:	50% modulation (37.5 kHz deviation), 400 Hz

( )* measured with the SENS switch engaged

While the information given is true at the time of printing, small production changes in the course of our company's policy of improvement through research and design might not necessarily be indicated in the specifications. We would ask you to check with your appointed Sony dealer if clarification on any point is required.

[SPECIFICATION LABEL]

- **AEP model**

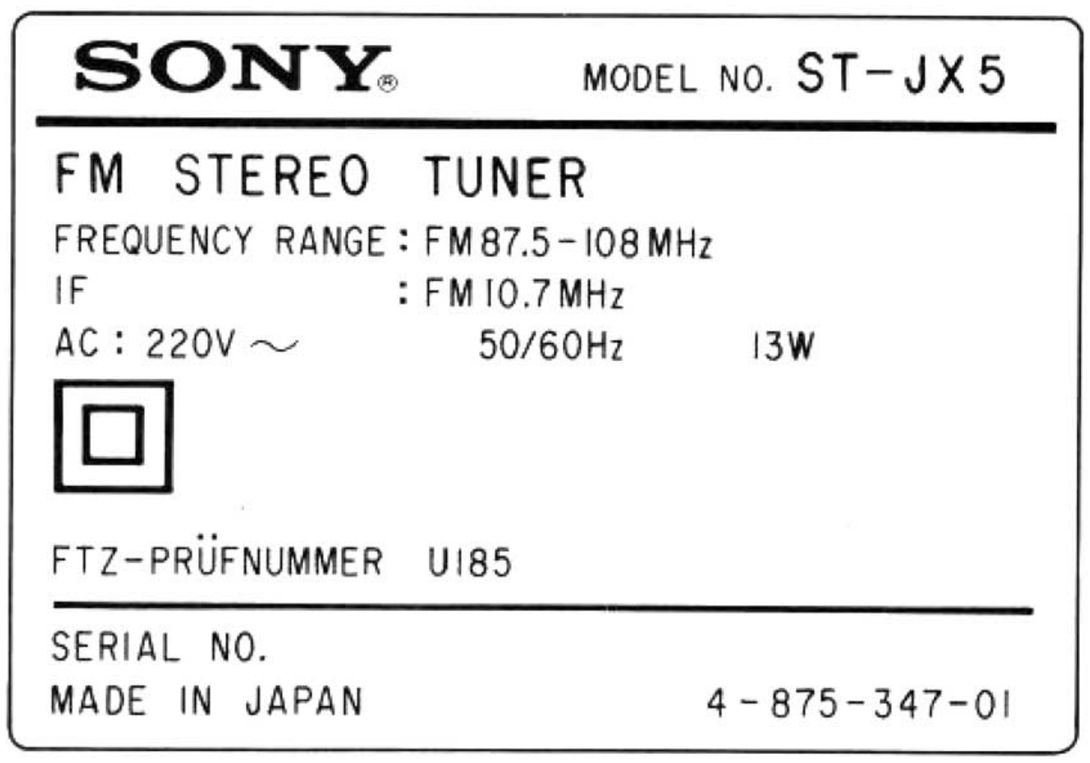

- **UK model**

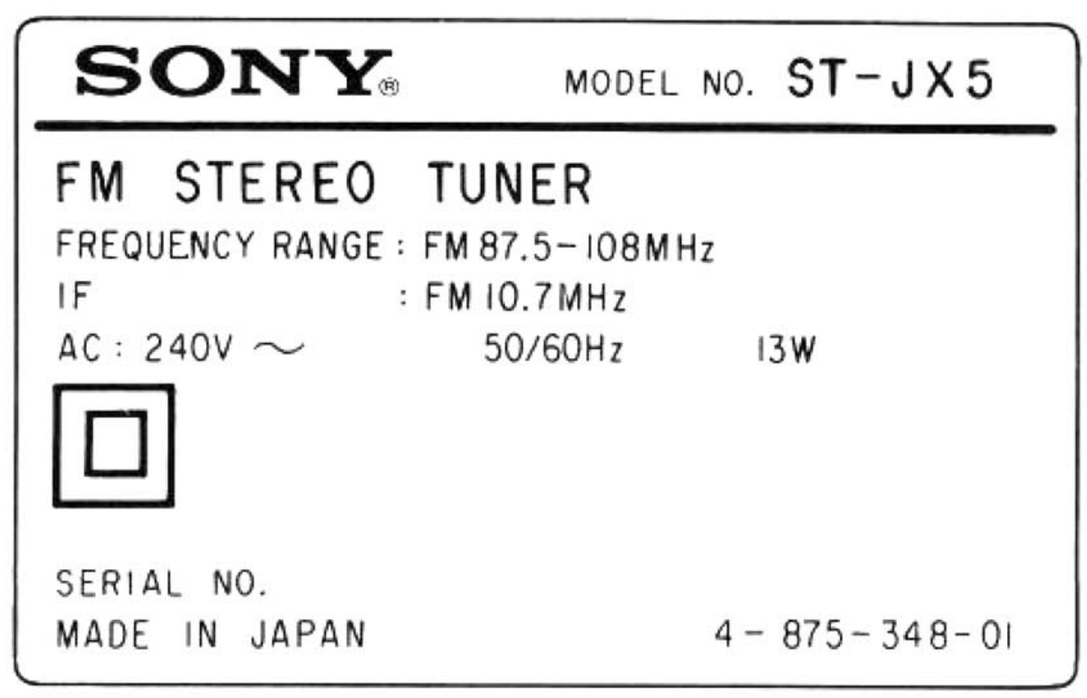

www.hifiengine.com

Handling Precautions for MOS ICs

Generally, the insulation resistance of the oxide layer in MOS IC structures is very high, and the oxide layer is very thin. Because of this, it is possible that the static voltages usually present on clothes and the human body will be enough to generate a potential difference across the insulator high enough to cause a breakdown of the insulating layer.

The following precautions should be taken while handling these ICs.

(Particular care should be taken under conditions of low humidity.)

Precautions in Replacing MOS ICs

1. Store new ICs by inserting them into a urethane-polyester cushion (that is somewhat conductive), or wrapping it in aluminum foil, so that all the pins are at the same potential.
   (The ICs should be stored in that manner until mounted on the circuit board.)

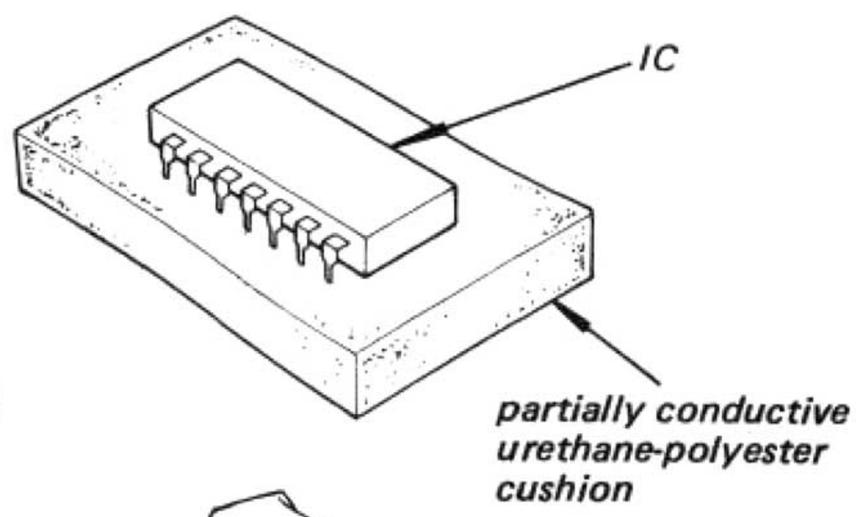

Fig. A

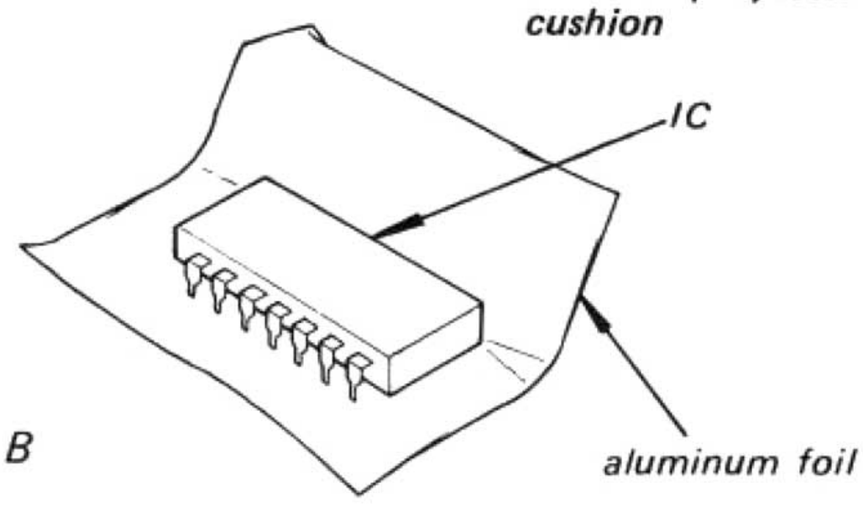

Fig. B

2. Check the soldering iron for possible power-line leakage current. Make sure that there is no leakage path by connecting an ohmmeter to the tip of the soldering iron and the plug as shown in Fig. C. If there is a leakage path, use some other soldering iron.

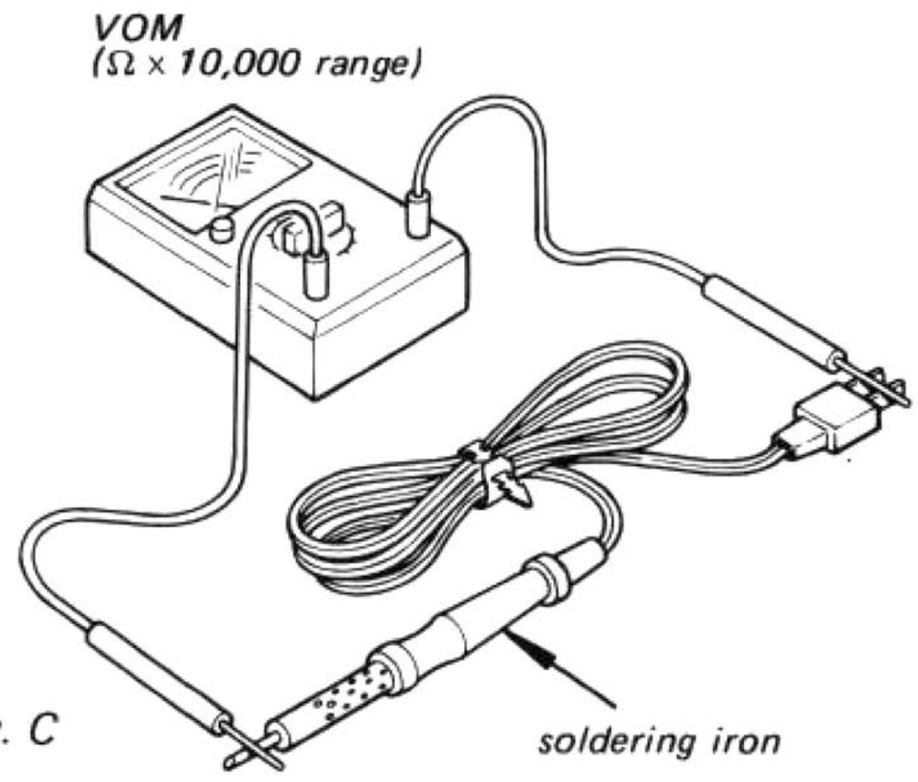

Fig. C

3. Equalize any potential difference between the clothes, the tools in use, the work bench, the set being worked on, and the packaged IC by touching them all in succession with the hands or a conductive wire or tool.

4. The following are effective methods for handling ICs that remove the potential difference across the oxide layer.
   - Use a paper clip modified by soldering in a wire braid insert.

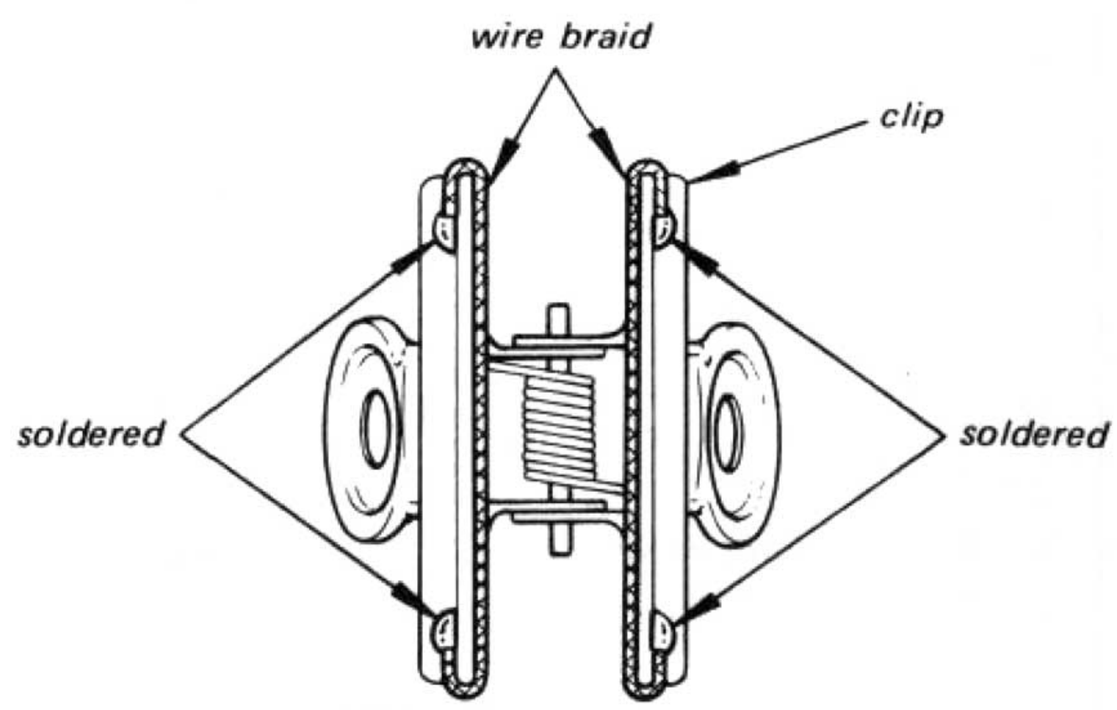

Fig. D

Make sure that there is no solder on the inside.

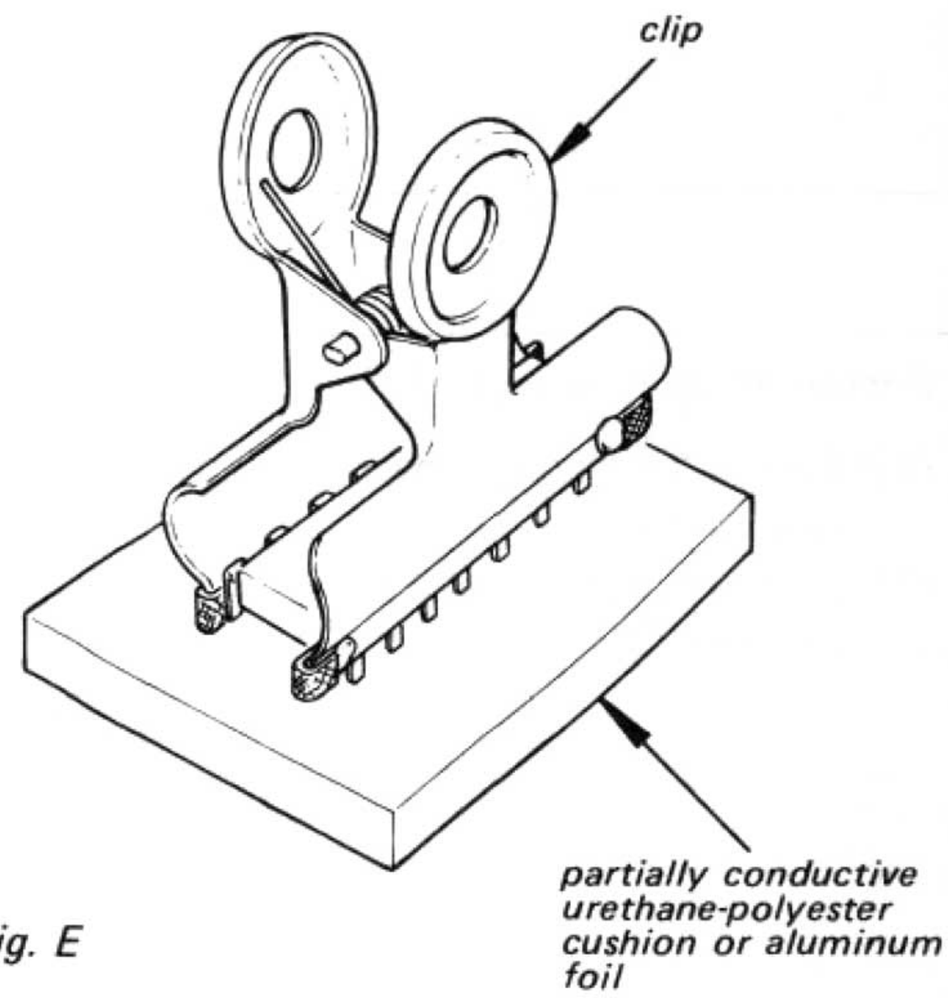

Fig. E

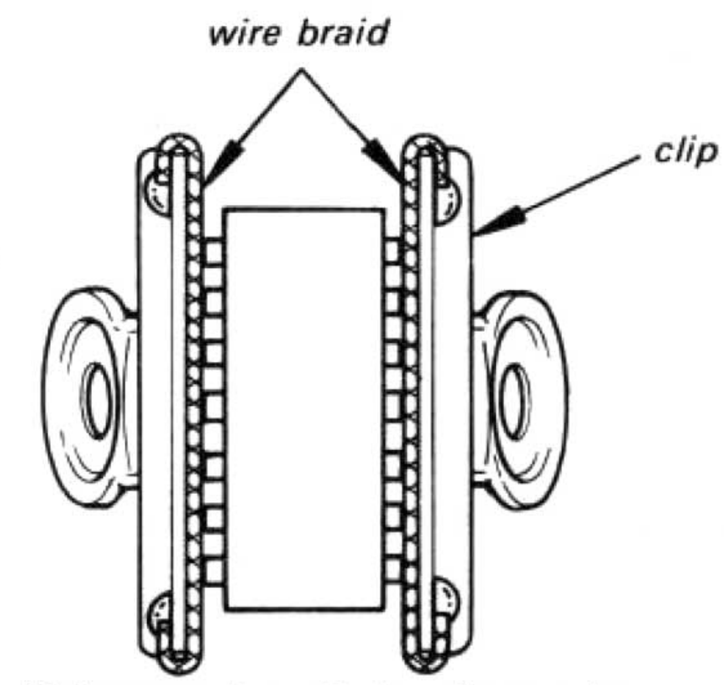

Fig. F

Make sure that all the pins are in contact with the wire braid (all the pins will then be at the same potential.).

www.hifiengine.com

- Take a short length of fine bare wire and wind it around the IC so that it shorts all the pins of the IC, while it is still in the urethane-polyester cushion or aluminum foil. This ensure that all the pins are at the same potential.

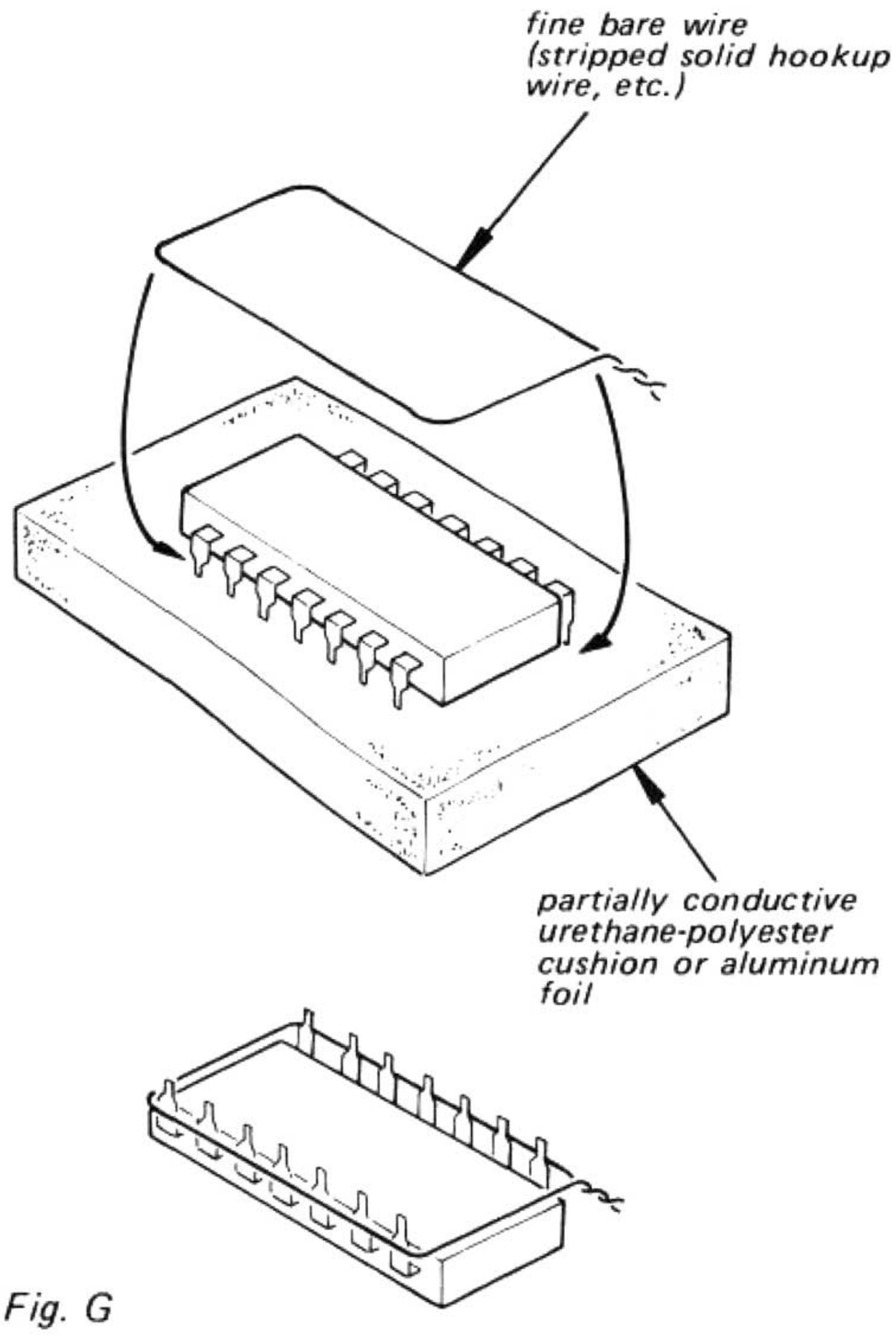

Fig. G

- When it is necessary to handle the IC with the fingers, do not touch any pin, and hold the IC at the ends of its plastic-package case as shown in Fig. H.

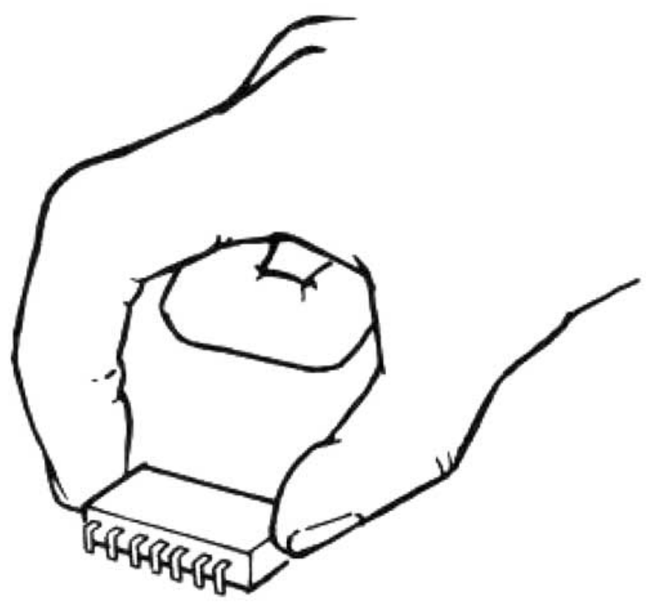

Fig. H

5. Method of Mounting
   Insert the IC while holding it with the modified clip, and solder all the pins with the clip still shorting the pins. (Similarly, solder all the pins while the bare shorting wire is still wound around them.). Remove the clip or the bare shorting wire only after all the pins have been soldered.

Precaution while Checking C-MOS ICs

The C-MOS ICs (Complementary MOS) are MOS ICs that have their output sections made up of N-channel and P-channel push-pull stages to increase their speed of operation. If the output terminal of these ICs comes into contact with B+ or B– voltage, then the FET which is ON at that time will either become shorted or open.

This is valid for all the output sections that are connected together by the interconnections. Even the circuits that are physically separated (and not on the same clip) can be destroyed simultaneously.

Example:

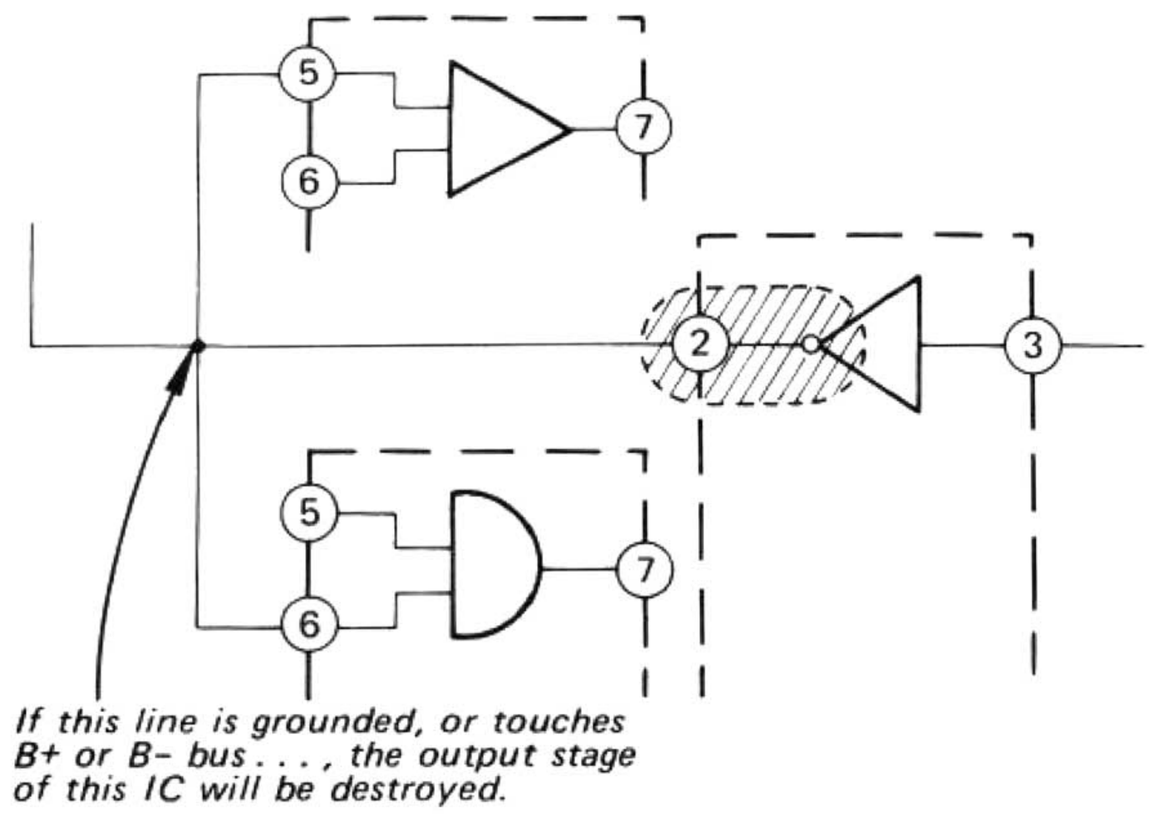

Fig. I

www.hifiengine.com

SECTION 1
BLOCK DIAGRAM

1-1. BLOCK DIAGRAM

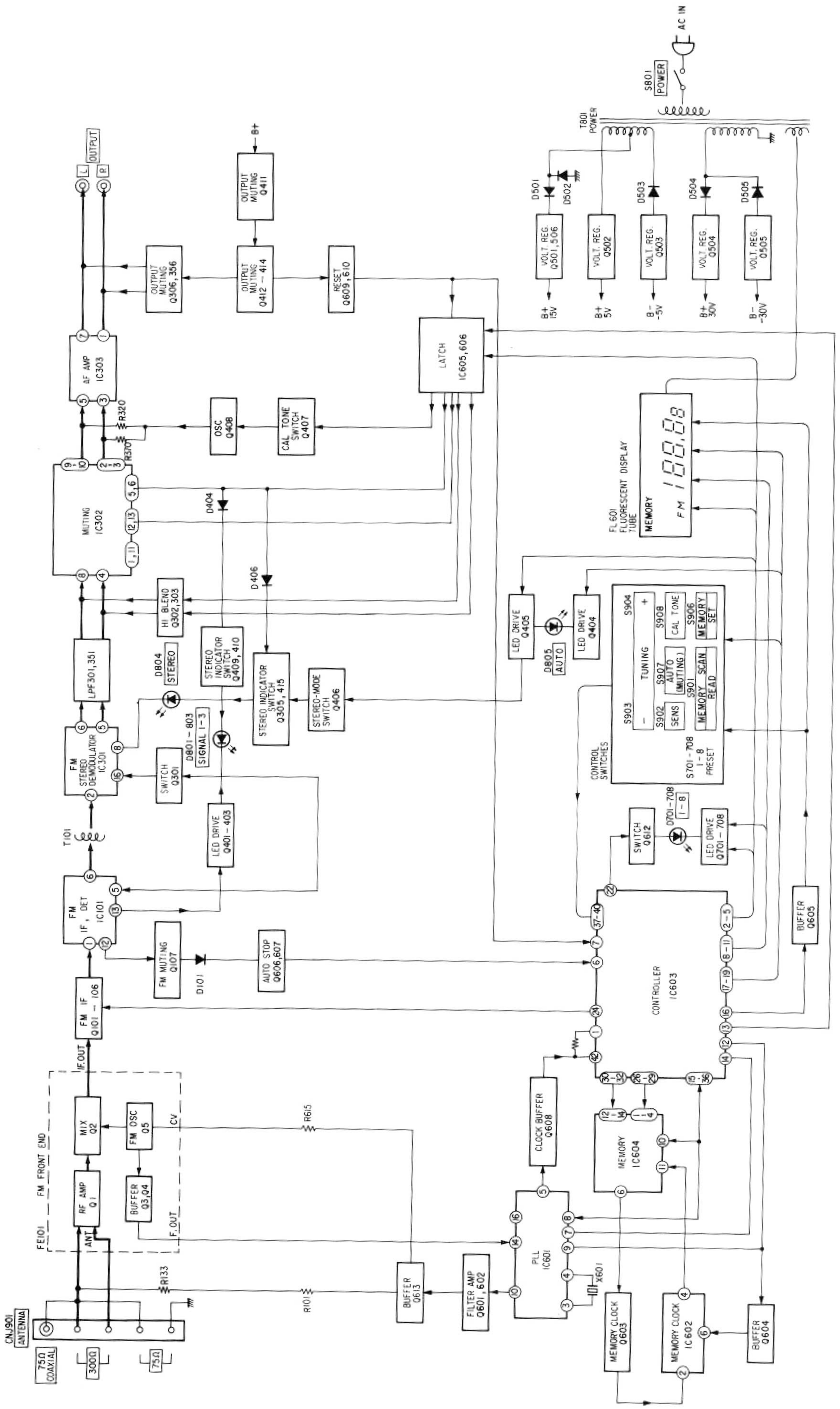

www.hifiengine.com

SECTION 2
DISASSEMBLY

Note: Follow the disassembly procedure in the numerical order given.

Top Cover and Front Panel Removal

- ❶, ❷ : top cover
- ❶ – ❻ : front panel

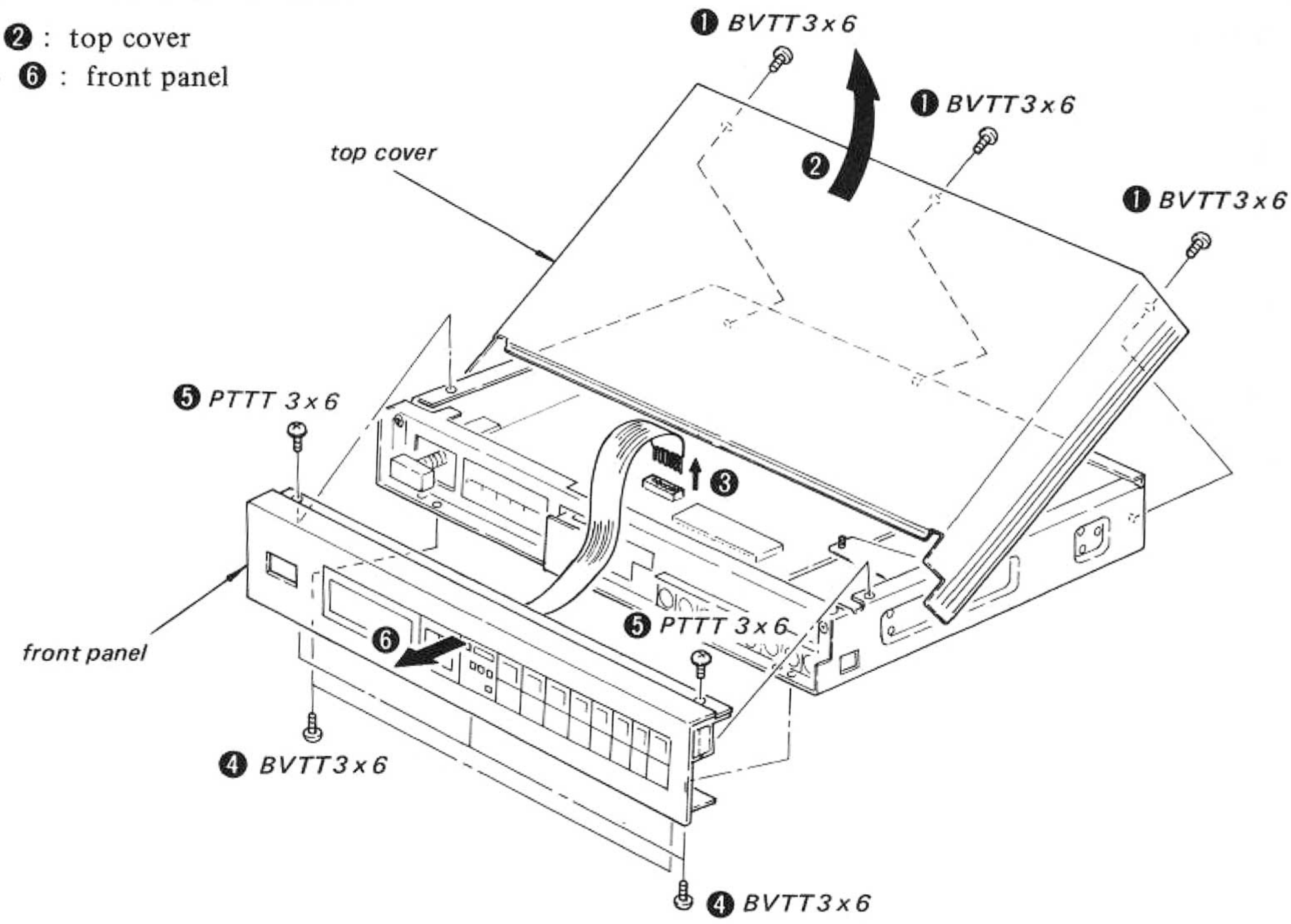

Bottom Plate Removal

(1): Loosen the eight screws (BVTT 3 x 6).

(2): Remove in the direction of arrow.

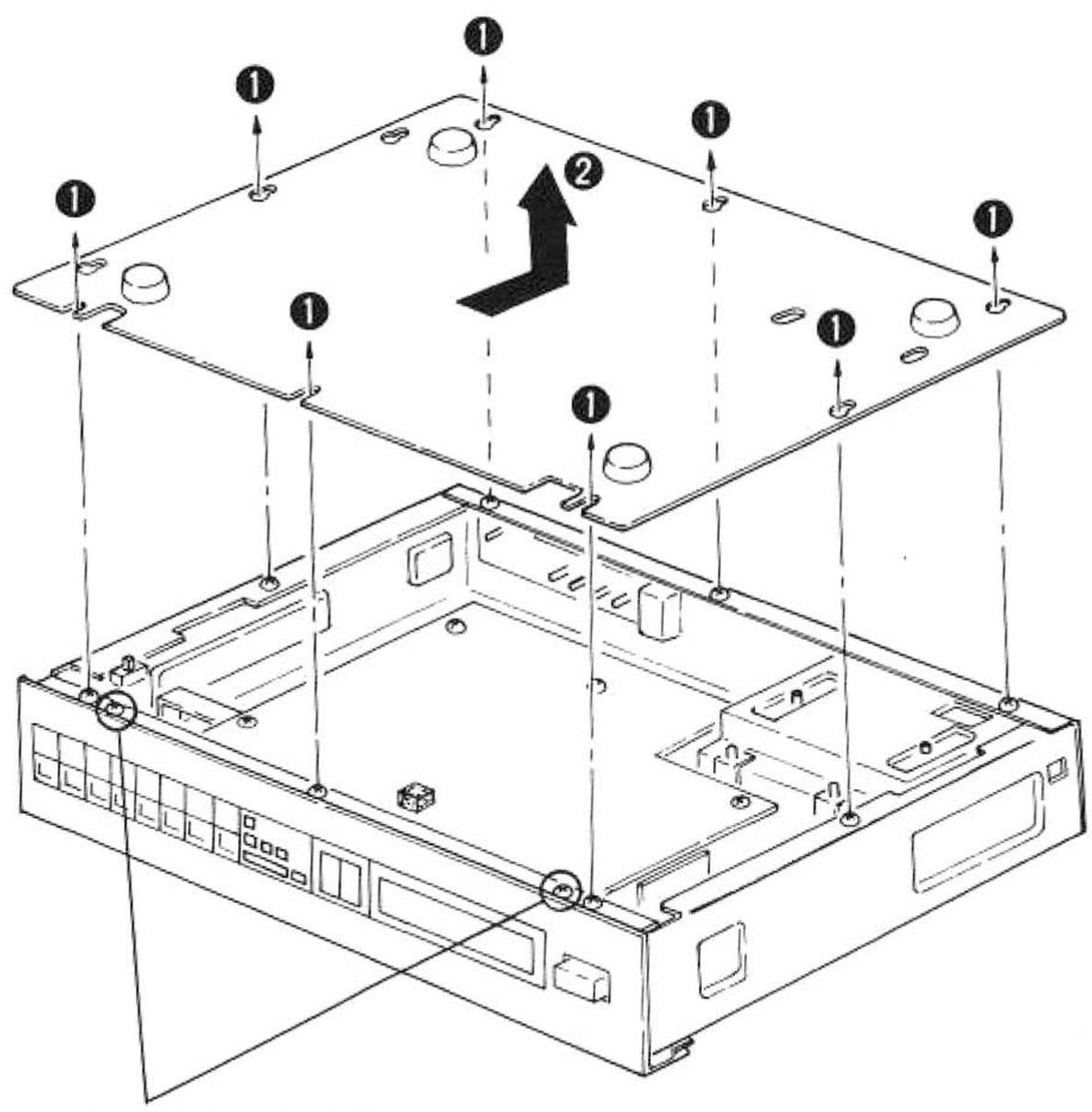

Note: Do not loosen these screws.

www.hifiengine.com

SECTION 3
ADJUSTMENTS

FM Stereo Separation Adjustment

Setting:

AUTO (MUTING) switch: ON

Procedures:

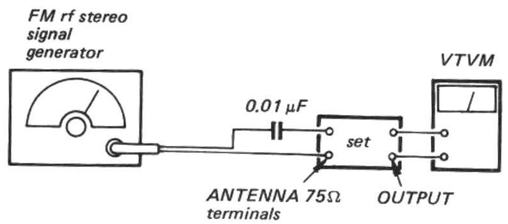

Carrier frequency: *98 MHz*
Output level: *1 mV (60 dB)*
Modulation:
Main-channel (1 kHz): *16.25 kHz deviation (40.625%)*
Sub-channel (38 kHz): *16.25 kHz deviation (40.625%)*
Pilot (19 kHz): *7.5 kHz deivation (18.75%)*

FM stereo signal generator output channel	VTVM connection	VTVM reading (dB)
L-CH	L-CH	Ⓐ
R-CH	L-CH	Ⓑ Adjust RT303 for minimum reading.
R-CH	R-CH	Ⓒ
L-CH	R-CH	Ⓓ Adjust RT303 for minimum reading.

L-CH Stereo separation: Ⓐ – Ⓑ
R-CH Stereo separation: Ⓒ – Ⓓ

The separations of both channels should be equal.

The FM front-end is carefully adjusted at the factory and is supplied as one whole block for replacement.

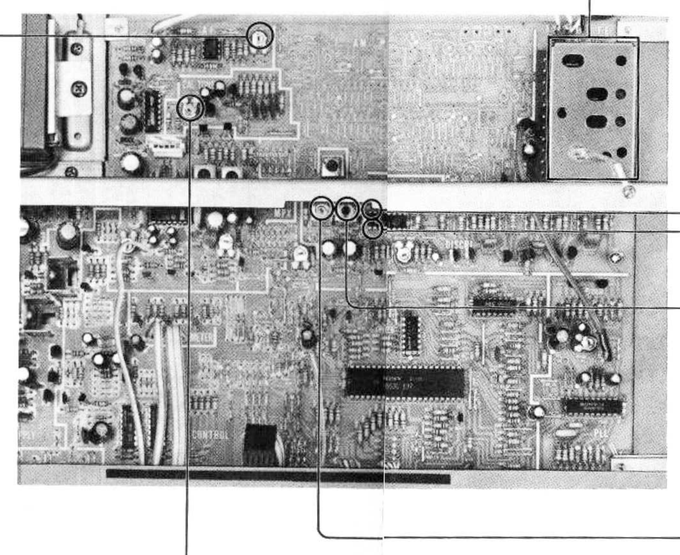

CAL TONE Level Adjustment

Setting:

CAL TONE switch: ON

Procedure:

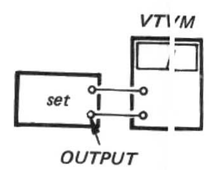

Adjust RT401 for 0.39 V (–6 dB) reading on the VTVM.

FM Discriminator Alignment 1

Setting:

AUTO (MUTING) switch: OFF

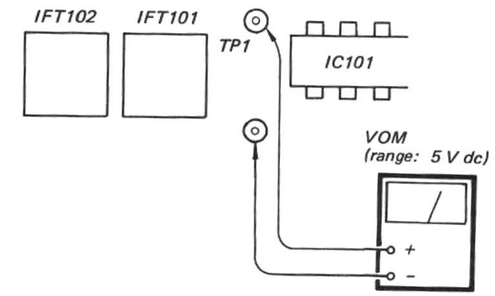

Procedure:

1. Tune the set in the strong station-signal.
2. Adjust the black core (primary-side) of IFT101 for 0 V reading on VOM.

Note: When replacing the ceramic filter perform this alignment.

FM Discriminator Alignment 2

Setting:

AUTO (MUTING) switch: OFF

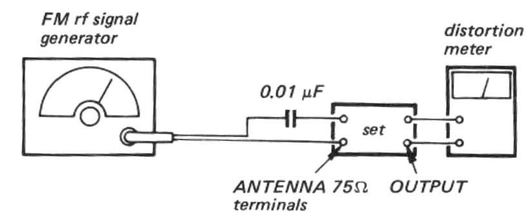

Carrier frequency: *98 MHz*
Output level: *1 mV (60 dB)*
Modulation: *400 Hz, 40 kHz deviation (100%)*

Procedure:

Adjust the white core (secondary side) of IFT102 for minimum distortion.

Note: When replacing the ceramic filter, perform this alignment.
Repeat the secondary-side and primary-side adjustment several times.

Pilot Canceller Adjustment

Setting:

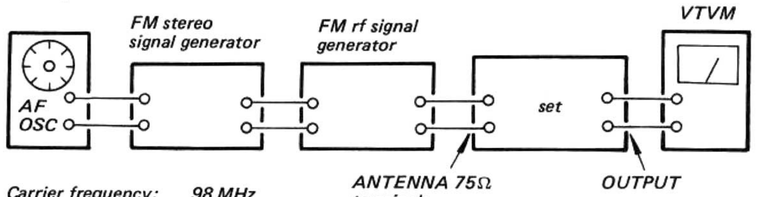

Carrier frequency: *98 MHz*
Output level: *1 mV (60 dB)*
Modulation:
Main-channel (1 kHz): *16.25 kHz deviation (40.625%)*
Sub-channel (38 kHz): *16.25 kHz deviation (40.625%)*
Pilot (19 kHz): *7.5 kHz deviation (18.75%)*

Procedure:

1. Set the indicator to MUTING LO' by pressing the MUTING switch.
2. Tune the set to 98 MHz by press ; the TUNING switches and adjust the r in channel of stereo signal generator.
3. Adjust RT301 to make the level ' L-CH and R-CH equal at the minimum of th channel canceller.

VCO Adjustment

Setting:

AUTO (MUTING) switch: OFF

Procedure:

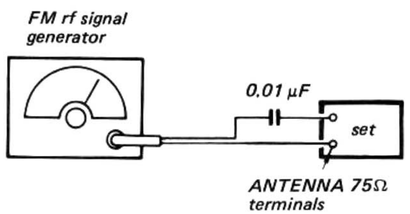

Carrier frequency: *98 MHz (modulation off)*
Output level: *1 mV (60 dB)*

1. Tune the set to 98 MHz by pressing the TUNING switches.
2. Adjust RT302 for 76 kHz ± 50 Hz on the counter.

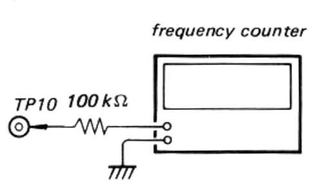

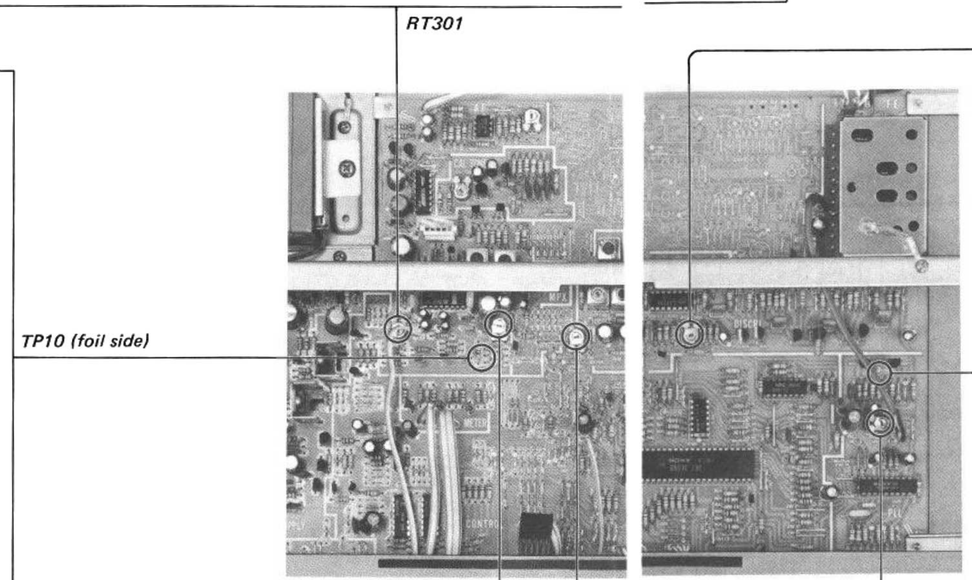

FM Signal Indicator Adjustment

Setting:

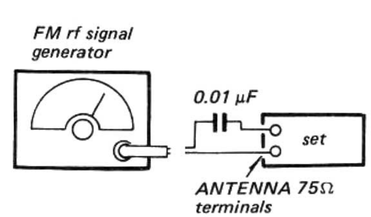

Carrier frequency: *98 MHz (modulation off)*
Output level: *10μV (20 dB)*

Procedure:

Adjust RT102 for 1st L ED of SIGNAL indicator half-lighting.

FM Muting Level Adjustment

Setting:

AUTO (MUTING) switch: ON

Procedure:

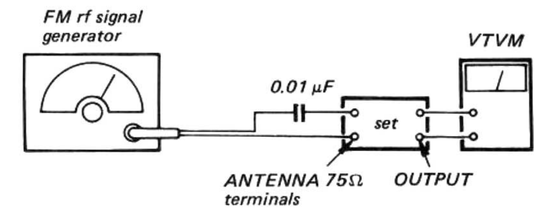

Carrier frequency: *98 MHz*
Modulation: *400 Hz, 40 kHz deviation (100%)*
Output level: *10μV (20 dB)*

1. Tune the set to 98 MHz by pressing the TUNING switches.
2. Adjust RT101 for a point the VTVM reading just drops to 0 V.

PLL Adjustment

Setting:

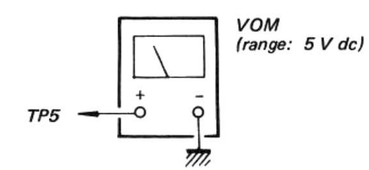

Procedure:

1. Tune the set to 87.5 MHz by pressing the TUNING switches.
2. Adjust RT601 for 1.8 V ± 0.1 V reading on VOM at TP5.

SECTION 4
DIAGRAMS

4-1. MOUNTING DIAGRAM

— Conductor Side —

Semiconductor Lead Layouts

2SC710	CX778 CX761A HA11223W LA1235 TC4013BP TC4066BP μPC4558C μPD4011C μPD553C137
2SA1015 **2SC1362** **2SC1364** **2SC1815** **2SC1890A** **2SC1890F**	10E-2 1S1555 EQA01-05R EQA01-06R HZ6B1L HZ30-3L
2SD880	
2SB733 **2SB734** **2SD734**	GL-5HY5 GL-5PR5 GL-5NG10 GL-5NY55
2SK30A	

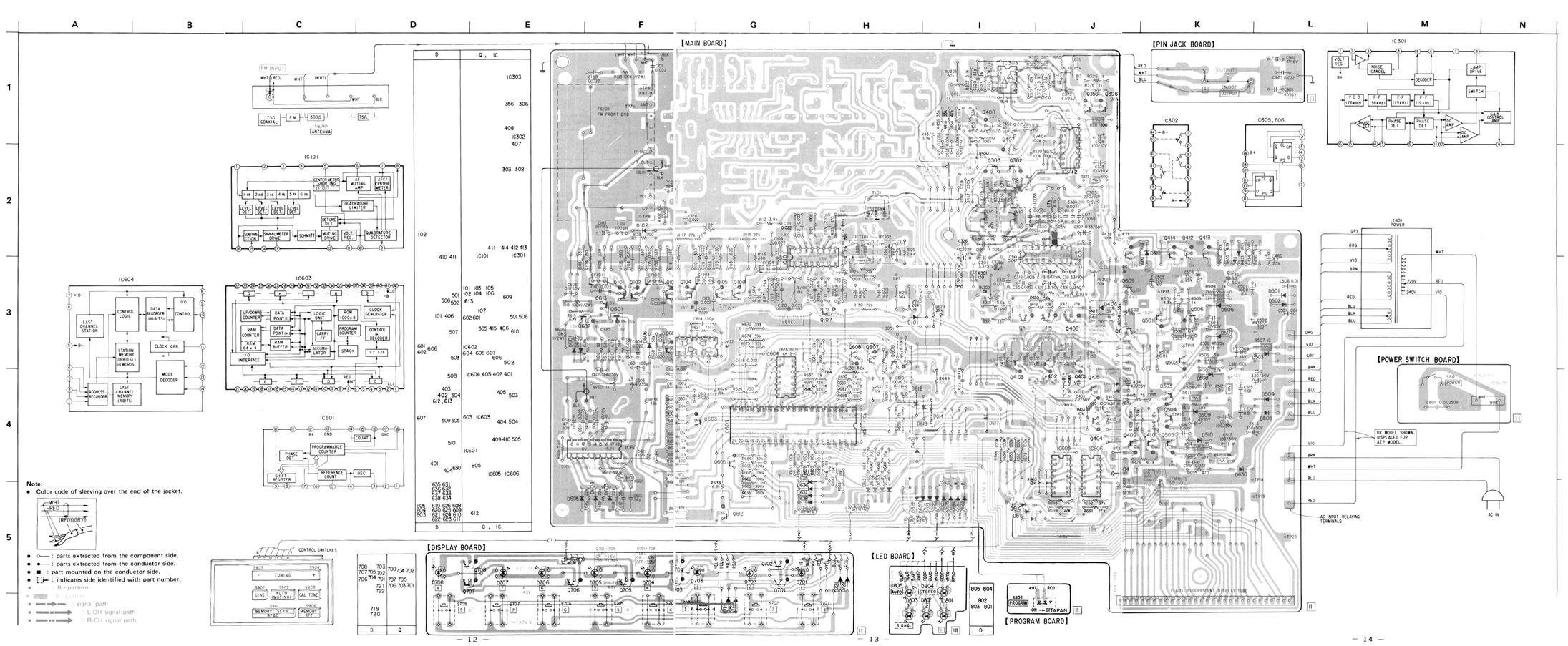

4-2. SCHEMATIC DIAGRAM

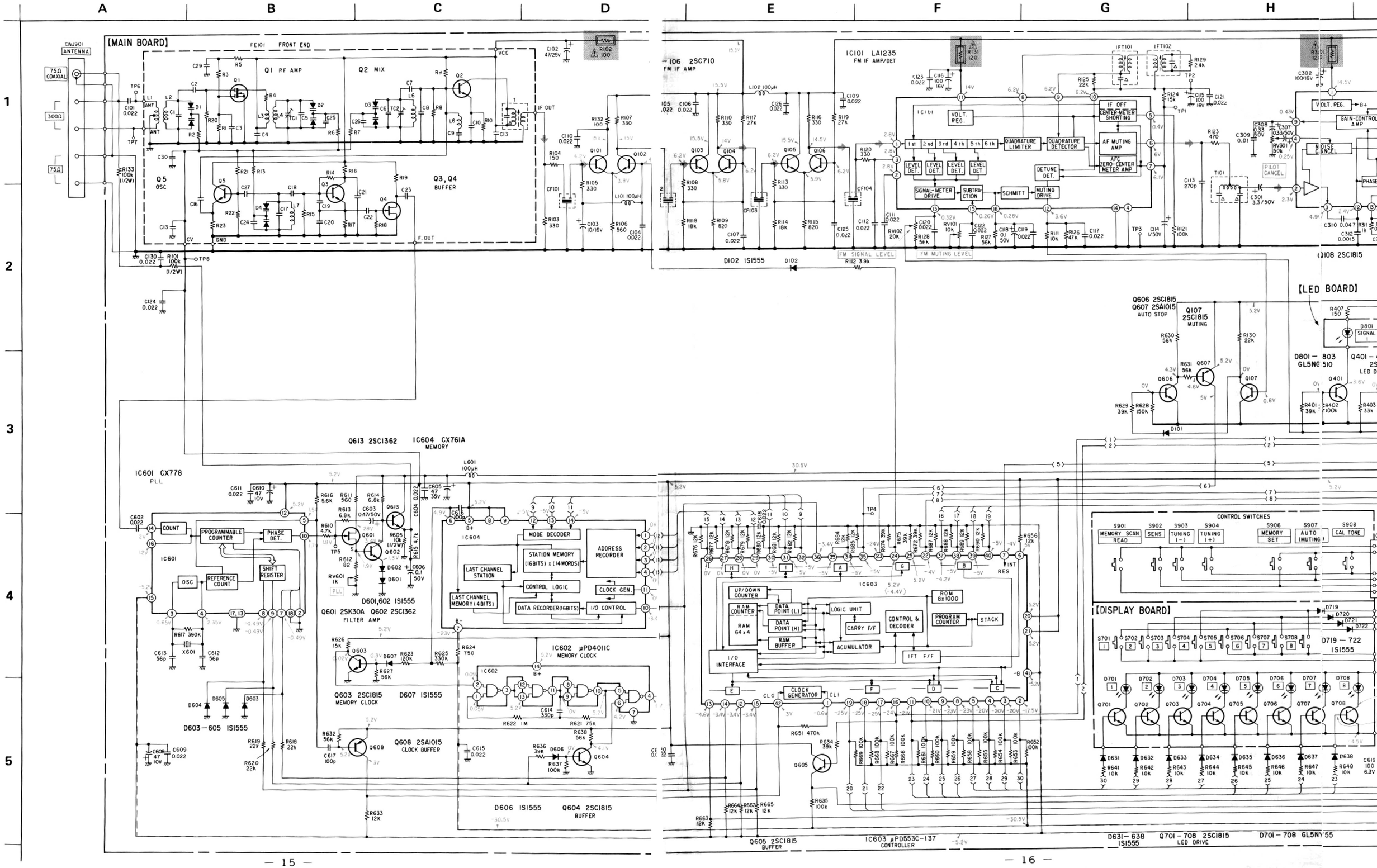

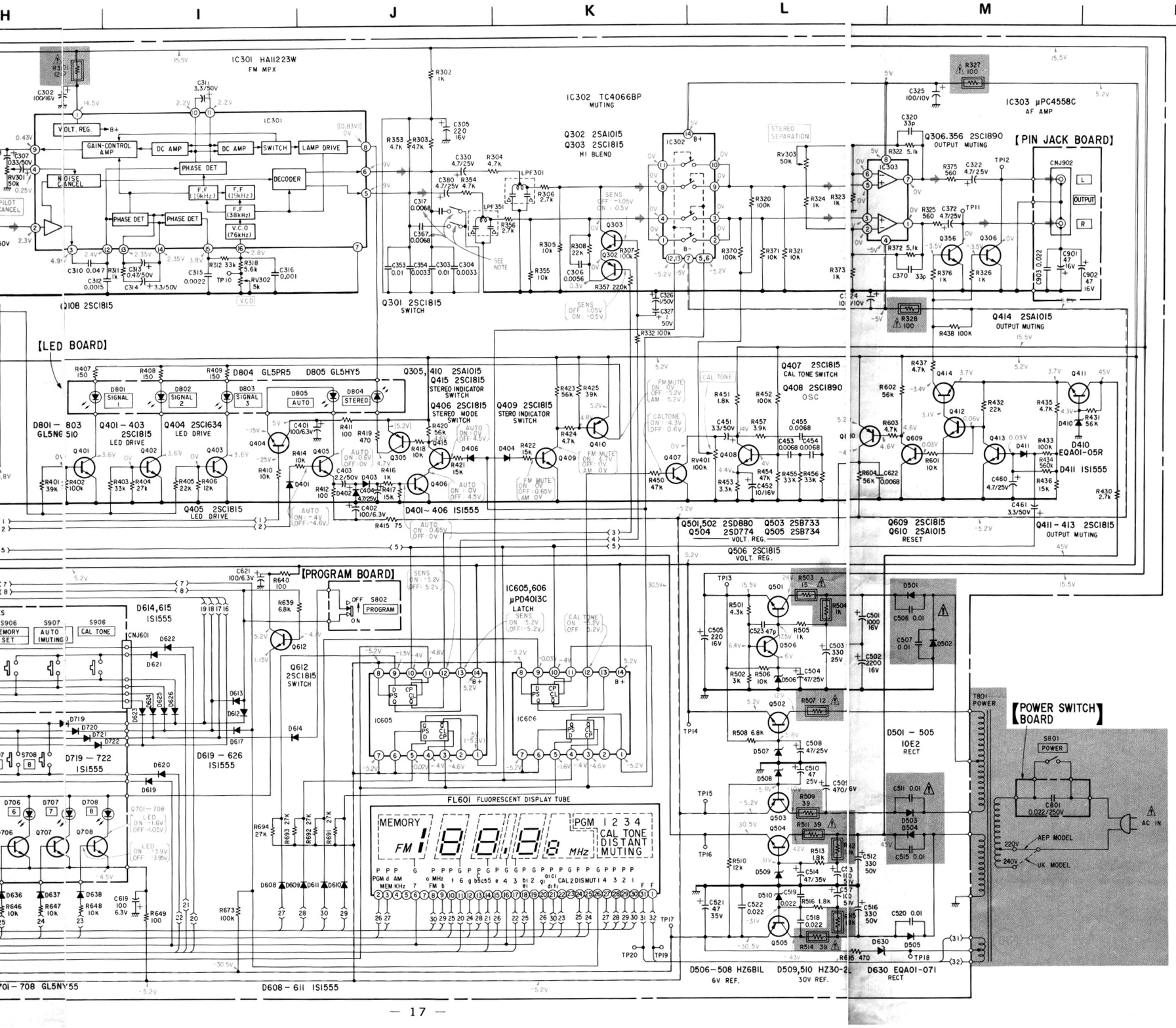

Note:

- C317, C367 and switch circuit are not used in AEP model bearing serial No. 503501 and later and in UK model bearing serial No. 800501 and later.
- All capacitors are in μF unless otherwise noted. pF : μμF
  50WV or less are not indicated except for electrolytics and tantalums.
- All resistors are in ohms, ¼W unless otherwise noted.
  kΩ : 1000Ω, MΩ : 1000kΩ
- : nonflammable resistor.
- : fusible resistor.
- △ : internal component.
- : panel designation.
- : adjustment for repair.
- : B+ bus.
- : B− bus.
- Voltages are dc with respect to ground unless otherwise noted.
- Readings are taken under no-signal conditions.
  [[ ]] : Tuned in FM stereo signal
- : signal path
- Switches

Ref. No.	Switch	Position
S701	PRESET	1
S702	PRESET	2
S703	PRESET	3
S704	PRESET	4
S705	PRESET	5
S706	PRESET	6
S707	PRESET	7
S708	PRESET	8
S801	POWER	OFF
S802	PROGRAM	ON
S901	MEMORY SCAN READ	OFF
S902	SENS	OFF
S903	TUNING −	OFF
S904	TUNING +	OFF
S905	FM	OFF
S906	MEMORY SET	OFF
S907	AUTO (MUTING)	OFF
S908	CAL. TONE	OFF

Note: Voltages are measured with a VOM (50kΩ/V).

Note: The components identified by shading and mark ⚠ are critical for safety. Replace only with part number specified.

5-1.

www.hifiengine.com

5-2.

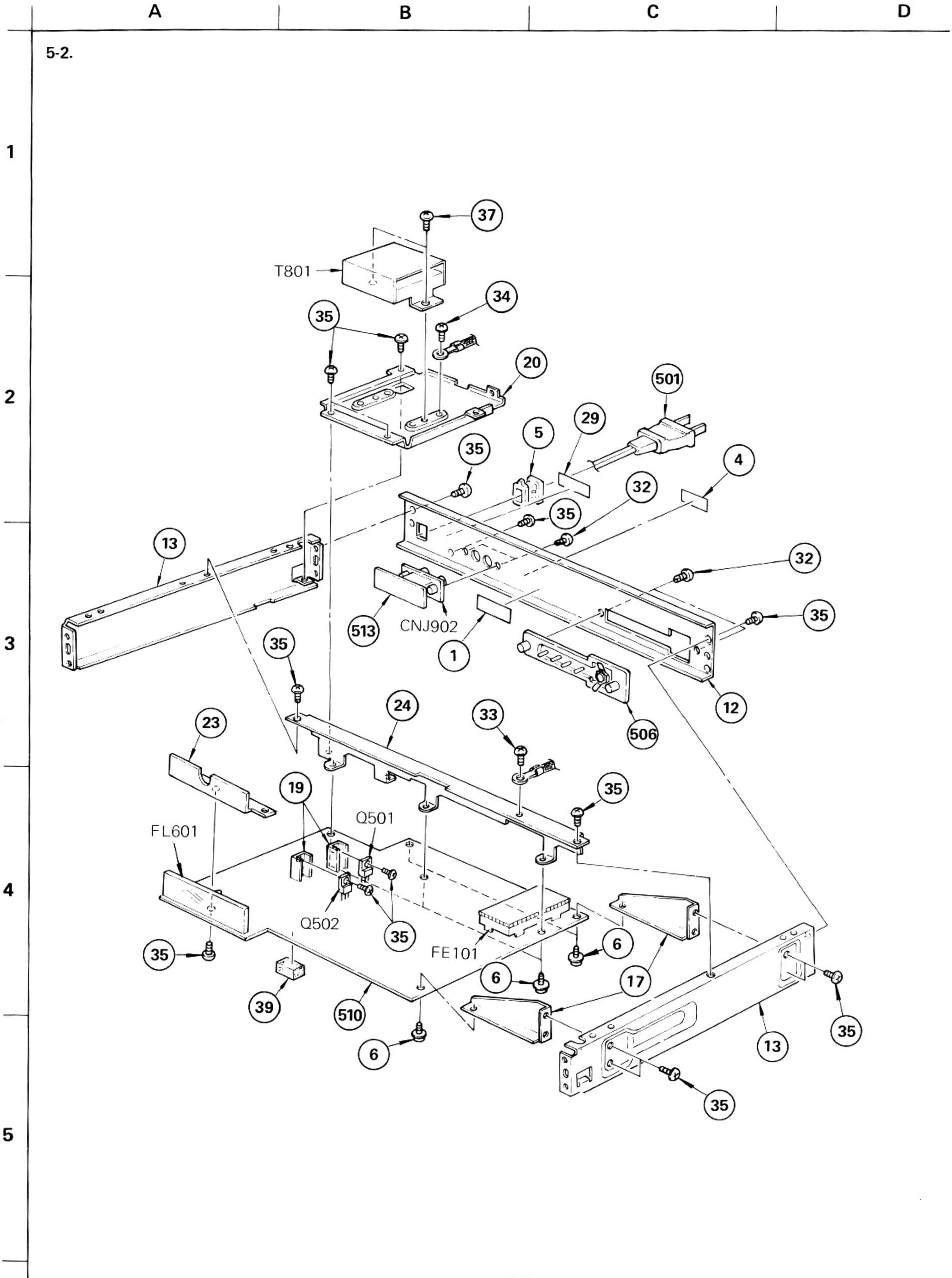

www.hifiengine.com

GENERAL SECTION

No.	Part No.	Description
1	3-701-030-00	LABEL, SERIAL NUMBER
2	3-701-690-00	(UK)....LABEL, MADE IN JAPAN
3	3-701-748-00	BINDER, WIRE
4	3-703-043-00	(UK)....LABEL, MAIN-CAUTION
5	⚠.3-703-244-00	BUSHING, CORD
6	3-703-249-01	SCREW, S TIGHT, +PTTWH 3X6
7	3-831-441-XX	CUSHION, SPEAKER
8	3-984-569-00	PLATE, INSULATION
9	4-871-322-01	CAP, POWER KNOB
10	4-871-323-00	BASE, POWER KNOB
11	*********	
12	♠;4-875-004-61	PLATE, JACK
13	♠;4-875-017-00	PLATE (L), SIDE
14	4-875-319-41	KNOB (5), PROGRAM
15	4-875-319-61	KNOB (7), PROGRAM
16	4-875-319-71	KNOB (8), PROGRAM
17	♠;4-875-325-00	BRACKET, CHASSIS
18	4-875-326-11	WINDOW (C), DIGITAL
19	♠;4-875-327-01	HEAT SINK
20	♠;4-875-329-00	BASE, TRANSFORMER
21	4-875-330-00	HOLDER (81), SCALE, DIAL
22	♠;4-875-332-00	HOUSE, SIGNAL
23	♠;4-875-333-00	RETAINER, TUBE, INDICATION
24	♠;4-875-336-00	CHASSIS, CENTER
25	♠;4-875-337-00	PLATE, BOTTOM
26	♠;4-875-340-00	CHASSIS, SUB
27	4-875-341-00	CASE
28	4-875-344-00	KNOB, SLIDE
29	4-875-347-00	(AEP)....LABEL, MODEL NUMBER
29	4-875-348-00	(UK).....LABEL, MODEL NUMBER
30	4-875-350-00	LABEL (C)
31	7-685-132-11	SCREW +P 2.6X5 TYPE2 NON-SLIT
32	7-685-646-11	SCREW +BVTP 3X8 TYPE2 N-S
33	7-685-751-01	SCREW +PTT 3X6 (S)
34	7-685-870-01	SCREW +BVTT 3X5 (S)
35	7-685-871-01	SCREW +BVTT 3X6 (S)
36	7-685-871-09	SCREW +BVTT 3X6 (S)
37	7-685-880-01	SCREW +BVTT 4X6 (S)
38	9-911-845-XX	CUSHION
39	9-911-846-XX	CUSHION
40	9-911-863-XX	COVER, EDGE
41	♠;A-4351-263-A	MOUNTED PCB, TUNER
42	A-4447-064-A	KNOB ASSY, POWER
43	X-3701-069-0	FOOT ASSY, M.F
44	X-4875-301-0	KNOB ASSY, PRESET
45	A-4322-360-A	PANEL ASSY, FRONT
46	2-045-013-21	WASHER, PANEL; 4
47	3-984-569-01	PLATE, INSULATION

NOTE:
- Items with no part number and no description are not stocked because they are seldom required for routine service.
- Items marked " ♠ " are not stocked since thev are seldom required for routine service. Some delay should be anticipated when ordering these items.
- Due to standardization, parts with part numbers (Δ-ΔΔΔ-ΔΔΔ-XX or Δ-ΔΔΔΔ-ΔΔΔ-X) may be different from those used in the set.

ELECTRICAL PARTS

Ref.No.	Part No.	Description			
501	⚠.1-534-817-XX	(AEP).....CORD, POWER			
501	⚠.1-551-884-31	(UK).....CORD, POWER			
502	♠;1-535-116-00	TERMINAL			
503	♠;1-535-118-00	TERMINAL			
504	♠;1-535-121-00	TERMINAL			
505	♠;1-535-140-00	BASE POST 19MM (10MM PITCH)			
506	1-536-666-00	TERMINAL BOARD (ANTENNA)			
507	♠;1-560-062-00	PIN, CONNECTOR 4P			
508	♠;1-560-595-00	TERMINAL (WITH BASE)			
509	♠;1-605-035-00	PC BOARD, RUBBER SHEET KEY SW			
510	♠;1-605-197-00	PC BOARD, TUNER			
511	♠;1-605-198-00	PC BOARD, DISPLAY			
512	♠;1-605-199-00	PC BOARD, LED			
513	♠;1-605-200-00	PC BOARD, PIN JACK			
514	♠;1-605-201-00	PC BOARD, AC SW			
515	♠;1-605-202-00	PC BOARD, PROGRAM SW			
C316	1-103-725-11	POLYSTYRENE	0.001MF	5%	50V
C506	⚠.1-101-004-00	CERAMIC	0.01MF	20%	50V
C507	⚠.1-101-004-00	CERAMIC	0.01MF	20%	50V
C511	⚠.1-101-004-00	CERAMIC	0.01MF	20%	50V
C515	⚠.1-101-004-00	CERAMIC	0.01MF	20%	50V
C520	⚠.1-101-004-00	CERAMIC	0.01MF	20%	50V
C801	⚠.1-130-456-00	FILM	0.022MF	20%	250V
CF101	1-527-799-00	FILTER, CERAMIC			
CF102	1-527-799-00	FILTER, CERAMIC			
CF103	1-527-799-00	FILTER, CERAMIC			
CF104	1-527-799-00	FILTER, CERAMIC			
CNJ601	♠;1-561-471-00	SOCKET, CONNECTOR 6P			
CNJ902	1-507-699-00	JACK, PIN 2P			
D101	8-719-815-55	DIODE 1S1555TP			
D102	8-719-815-55	DIODE 1S1555TP			
D105	8-719-815-55	DIODE 1S1555TP			
D401	8-719-815-55	DIODE 1S1555TP			
D402	8-719-815-55	DIODE 1S1555TP			
D403	8-719-815-55	DIODE 1S1555TP			
D404	8-719-815-55	DIODE 1S1555TP			
D406	8-719-815-55	DIODE 1S1555TP			
D410	8-719-936-05	DIODE EQA01-05RV			
D411	8-719-815-55	DIODE 1S1555TP			
D501	⚠.8-719-200-02	DIODE 10E-2TP			
D502	⚠.8-719-200-02	DIODE 10E-2TP			
D503	⚠.8-719-200-02	DIODE 10E-2TP			
D504	⚠.8-719-200-02	DIODE 10E-2TP			
D505	⚠.8-719-200-02	DIODE 10E-2TP			

CAPACITORS:
- All capacitors are in μF. Common capacitors are omitted. Refer to the following lists for their part numbers. MF:μF, PF:μμF.

RESISTORS
- All resistors are in ohms. Common 1/4W, 1/8W and 1/16W carbon resistors are omitted. Refer to the following lists for their part numbers.
- F : nonflammable

The components identified by shading and mark ⚠ are critical for safety. Replace only with part number specified.

COILS
- MMH : mH, UH : μH

www.hifiengine.com

ELECTRICAL PARTS

Ref.No.	Part No.	Description
D506	8-719-910-64	DIODE HZ6B1LTP
D507	8-719-910-64	DIODE HZ6B1LTP
D508	8-719-910-64	DIODE HZ6B1LTP
D509	8-719-913-03	DIODE HZ30-3LTP
D510	8-719-913-03	DIODE HZ30-3LTP
D601	8-719-815-55	DIODE 1S1555TP
D602	8-719-815-55	DIODE 1S1555TP
D603	8-719-815-55	DIODE 1S1555TP
D604	8-719-815-55	DIODE 1S1555TP
D605	8-719-815-55	DIODE 1S1555TP
D606	8-719-815-55	DIODE 1S1555TP
D607	8-719-815-55	DIODE 1S1555TP
D608	8-719-815-55	DIODE 1S1555TP
D609	8-719-815-55	DIODE 1S1555TP
D610	8-719-815-55	DIODE 1S1555TP
D611	8-719-815-55	DIODE 1S1555TP
D612	8-719-815-55	DIODE 1S1555TP
D613	8-719-815-55	DIODE 1S1555TP
D614	8-719-815-55	DIODE 1S1555TP
D615	8-719-815-55	DIODE 1S1555TP
D617	8-719-815-55	DIODE 1S1555TP
D619	8-719-815-55	DIODE 1S1555TP
D620	8-719-815-55	DIODE 1S1555TP
D621	8-719-815-55	DIODE 1S1555TP
D622	8-719-815-55	DIODE 1S1555TP
D623	8-719-815-55	DIODE 1S1555TP
D624	8-719-815-55	DIODE 1S1555TP
D625	8-719-815-55	DIODE 1S1555TP
D626	8-719-815-55	DIODE 1S1555TP
D630	8-719-936-06	DIODE EQA01-06RV
D631	8-719-815-55	DIODE 1S1555TP
D632	8-719-815-55	DIODE 1S1555TP
D633	8-719-815-55	DIODE 1S1555TP
D634	8-719-815-55	DIODE 1S1555TP
D635	8-719-815-55	DIODE 1S1555TP
D636	8-719-815-55	DIODE 1S1555TP
D637	8-719-815-55	DIODE 1S1555TP
D638	8-719-815-55	DIODE 1S1555TP
D701	8-719-900-66	DIODE GL-5NY55-A
D702	8-719-900-66	DIODE GL-5NY55-A
D703	8-719-900-66	DIODE GL-5NY55-A
D704	8-719-900-66	DIODE GL-5NY55-A
D705	8-719-900-66	DIODE GL-5NY55-A
D706	8-719-900-66	DIODE GL-5NY55-A
D707	8-719-900-66	DIODE GL-5NY55-A

ELECTRICAL PARTS

Ref.No.	Part No.	Description
D708	8-719-900-66	DIODE GL-5NY55-A
D719	8-719-815-55	DIODE 1S1555TP
D720	8-719-815-55	DIODE 1S1555TP
D721	8-719-815-55	DIODE 1S1555TP
D722	8-719-815-55	DIODE 1S1555TP
D801	8-719-951-00	DIODE GL-5NG10
D802	8-719-951-00	DIODE GL-5NG10
D803	8-719-951-00	DIODE GL-5NG10
D804	8-719-900-56	DIODE GL-5PR5
D805	8-719-900-57	DIODE GL-5HY5
FE101	1-463-365-00	FRONT END
FL601	1-519-228-00	INDICATOR TUBE, FLUORESCENT
IC101	8-759-802-35	IC LA1235S
IC301	8-759-312-23	IC HA11223W
IC302	8-759-240-66	IC TC4066BP
IC303	8-759-145-58	IC UPC4558C
IC601	8-759-607-78	IC CX-778
IC602	8-759-140-11	IC UPD4011C
IC603	8-759-131-37	IC UPD553C137
IC604	8-757-611-00	IC CX-761A
IC605	8-759-240-13	IC TC4013BP
IC606	8-759-240-13	IC TC4013BP
IFT101	1-404-339-00	TRANSFORMER, DISCRIMINATOR
IFT102	1-404-338-00	TRANSFORMER, DISCRIMINATOR
L101	1-407-169-XX	MICRO INDUCTOR 100UH
L102	1-407-169-XX	MICRO INDUCTOR 100UH
L601	1-407-169-XX	MICRO INDUCTOR 100UH
LPF301	1-235-060-00	FILTER, LOW PASS
LPF351	1-235-060-00	FILTER, LOW PASS
Q101	8-729-671-14	TRANSISTOR 2SC710-14
Q102	8-729-671-14	TRANSISTOR 2SC710-14
Q103	8-729-671-14	TRANSISTOR 2SC710-14
Q104	8-729-671-14	TRANSISTOR 2SC710-14
Q105	8-729-671-14	TRANSISTOR 2SC710-14
Q106	8-729-671-14	TRANSISTOR 2SC710-14
Q107	8-729-663-47	TRANSISTOR 2SC1364
Q302	8-729-201-52	TRANSISTOR 2SA1015-Y
Q303	8-729-663-47	TRANSISTOR 2SC1364
Q305	8-729-201-52	TRANSISTOR 2SA1015-Y
Q306	8-729-255-12	TRANSISTOR 2SC1890-F
Q356	8-729-255-12	TRANSISTOR 2SC1890-F
Q401	8-729-663-47	TRANSISTOR 2SC1364
Q402	8-729-663-47	TRANSISTOR 2SC1364

NOTE:
- Items with no part number and no description are not stocked because they are seldom required for routine service.
- Items marked " ♦ " are not stocked since they are seldom required for routine service. Some delay should be anticipated when ordering these items.
- Due to standardization, parts with part numbers (Δ-ΔΔΔ-ΔΔΔ-XX or Δ-ΔΔΔΔ-ΔΔΔ-X) may be different from those used in the set.

CAPACITORS:
- All capacitors are in μF. Common capacitors are omitted. Refer to the following lists for their part numbers. MF:μF, PF:μμF.

RESISTORS
- All resistors are in ohms. Common 1/4W, 1/8W and 1/16W carbon resistors are omitted. Refer to the following lists for their part numbers.
- F : nonflammable

The components identified by shading and mark ⚠ are critical for safety. Replace only with part number specified.

COILS
- MMH : mH, UH : μH

www.hifiengine.com

ELECTRICAL PARTS

Ref.No.	Part No.	Description
Q403	8-729-663-47	TRANSISTOR 2SC1364
Q404	8-769-663-47	TRANSISTOR 2SC1364
Q405	8-729-663-47	TRANSISTOR 2SC1364
Q406	8-729-663-47	TRANSISTOR 2SC1364
Q407	8-729-663-47	TRANSISTOR 2SC1364
Q408	8-729-255-12	TRANSISTOR 2SC1890-F
Q409	8-729-663-47	TRANSISTOR 2SC1364
Q410	8-729-201-52	TRANSISTOR 2SA1015-Y
Q411	8-729-663-47	TRANSISTOR 2SC1364
Q412	8-729-663-47	TRANSISTOR 2SC1364
Q413	8-729-663-47	TRANSISTOR 2SC1364
Q414	8-729-201-52	TRANSISTOR 2SA1015-Y
Q415	8-729-663-47	TRANSISTOR 2SC1364
Q501	8-729-288-02	TRANSISTOR 2SD880-0
Q502	8-729-288-02	TRANSISTOR 2SD880-0
Q503	8-729-113-32	TRANSISTOR 2SB733-L
Q504	8-729-177-43	TRANSISTOR 2SD774-L
Q505	8-729-103-43	TRANSISTOR 2SB734-L
Q506	8-729-663-47	TRANSISTOR 2SC1364
Q601	8-729-203-05	TRANSISTOR 2SK30A-GR3
Q602	8-729-665-47	TRANSISTOR 2SC1362-48
Q603	8-729-663-47	TRANSISTOR 2SC1364
Q604	8-729-663-47	TRANSISTOR 2SC1364
Q605	8-729-663-47	TRANSISTOR 2SC1364
Q606	8-729-663-47	TRANSISTOR 2SC1364
Q607	8-729-201-52	TRANSISTOR 2SA1015-Y
Q608	8-729-201-52	TRANSISTOR 2SA1015-Y
Q609	8-729-663-47	TRANSISTOR 2SC1364
Q610	8-729-201-52	TRANSISTOR 2SA1015-Y
Q611	8-729-663-47	TRANSISTOR 2SC1364
Q612	8-729-663-47	TRANSISTOR 2SC1364
Q613	8-729-665-47	TRANSISTOR 2SC1362-48
Q701	8-729-663-47	TRANSISTOR 2SC1364
Q702	8-729-663-47	TRANSISTOR 2SC1364
Q703	8-729-663-47	TRANSISTOR 2SC1364
Q704	8-729-663-47	TRANSISTOR 2SC1364
Q705	8-729-663-47	TRANSISTOR 2SC1364
Q706	8-729-663-47	TRANSISTOR 2SC1364
Q707	8-729-663-47	TRANSISTOR 2SC1364
Q708	8-729-663-47	TRANSISTOR 2SC1364
R101	1-244-921-00	CARBON 100K 5% 1/2W
R102 ⚠	1-247-107-00	CARBON, FUSIBLE 100 5% 1/4W
R131 ⚠	1-247-109-00	CARBON, FUSIBLE 230 5% 1/4W
R133	1-244-921-00	CARBON 100K 5% 1/2W
R301 ⚠	1-247-109-00	CARBON, FUSIBLE 230 5% 1/4W
R327 ⚠	1-247-107-00	CARBON, FUSIBLE 100 5% 1/4W
R328 ⚠	1-247-107-00	CARBON, FUSIBLE 100 5% 1/4W
R503 ⚠	1-247-087-00	CARBON, FUSIBE 15 5% 1/4W
R504 ⚠	1-247-131-00	CARBON, FUSIBE 1K 5% 1/4W

ELECTRICAL PARTS

Ref.No.	Part No.	Description
R507 ⚠	1-247-085-00	CARBON, FUSIBE 12 5% 1/4W
R509 ⚠	1-247-097-00	CARBON, FUSIBE 39 5% 1/4W
R511 ⚠	1-247-097-00	CARBON, FUSIBE 39 5% 1/4W
R512 ⚠	1-247-137-00	CARBON, FUSIBE 1.8K 5% 1/4W
R514 ⚠	1-247-097-00	CARBON, FUSIBLE 39 5% 1/4W
R515 ⚠	1-247-137-00	CARBON, FUSIBLE 1.8K 5% 1/4W
R605	1-244-897-00	CARBON 10K 5% 1/2W
RT101	1-226-236-00	RES, ADJ, CARBON 10K
RT102	1-226-237-00	RES, ADJ, CARBON 20K
RT301	1-226-238-00	RES, ADJ, CARBON 50K
RT302	1-226-235-00	RES, ADJ, CARBON 5K
RT303	1-226-238-00	RES, ADJ, CARBON 50K
RT401	1-226-239-00	RES, ADJ, CARBON 100K
RT601	1-226-233-00	RES, ADJ, CARBON 1K
S701	1-552-539-00	SWITCH, KEY BOARD
S702	1-552-539-00	SWITCH, KEY BOARD
S703	1-552-539-00	SWITCH, KEY BOARD
S704	1-552-539-00	SWITCH, KEY BOARD
S705	1-552-539-00	SWITCH, KEY BOARD
S706	1-552-539-00	SWITCH, KEY BOARD
S707	1-552-539-00	SWITCH, KEY BOARD
S708	1-552-539-00	SWITCH, KEY BOARD
S801 ⚠	1-553-318-00	SWITCH, PUSH (AC POWER)
S802	1-552-430-00	SWITCH, SLIDE
S901		
S902	1-553-742-00	SWITCH, RUBBER KEY
S903		
S904		
S906		
S907	1-553-742-00	SWITCH, RUBBER KEY
S908		
T101	1-235-061-00	INCAPSULATED COMPONENT
T801 ⚠	1-447-064-00	TRANSFORMER, POWER
X601	1-527-731-00	OSCILLATOR, CRYSTAL

ACCESSORIES AND PACKING MATERIALS

No.	Part No.	Description
61	1-501-161-00	ANTENNA,FEEDER
62	1-551-734-11	CORD, CONNECTION (RK-74A)
63	3-701-360-00	LABEL, TACK
64	3-701-630-00	BAG, POLYETHYLENE
65	3-783-532-11	MANUAL, INSTRUCTION
66	3-795-187-11	INSTRUCTION (DUTCH)
67	4-875-314-00	INDICATOR (EP), STATION
68	4-875-040-00	SHEET, PROTECTION
69	4-875-042-00	CUSHION, BOTTOM
70	4-875-043-00	CUSHION, TOP
71	4-875-357-00	CARTON, INDIVIDUAL
72	4-875-360-00	HOLDER, MASTER

NOTE:
- Items with no part number and no description are not stocked because they are seldom required for routine service.
- Items marked " ♦ " are not stocked since thev are seldom required for routine service. Some delay should be anticipated when ordering these items.
- Due to standardization, parts with part numbers (Δ-ΔΔΔ-ΔΔΔ-XX or Δ-ΔΔΔΔ-ΔΔΔ-X) may be different from those used in the set.

CAPACITORS:
- All capacitors are in μF. Common capacitors are omitted. Refer to the following lists for their part numbers. MF:μF, PF:μμF.

RESISTORS
- All resistors are in ohms. Common 1/4W, 1/8W and 1/16W carbon resistors are omitted. Refer to the following lists for their part numbers.
- F : nonflammable

The components identified by shading and mark ⚠ are critical for safety. Replace only with part number specified.

COILS
- MMH : mH, UH : μH

www.hifiengine.com

SONY-STANDARD CAPACITORS, RESISTORS AND HARDWARES

ELECTROLYTIC CAPACITORS

CAP. (μF)	RATING → : Use the high voltage rated one.					
	6.3 VOLT.	10 VOLT.	16 VOLT.	25 VOLT.	35 VOLT.	50 VOLT.
	PART No.	PART No.	PART No.	PART No.	PART No.	PART No.
0.47					→	1-121-726-00
1.0					→	1-121-391-00
2.2					→	1-121-450-00
3.3	→	→	→	1-121-392-00	→	1-121-393-00
4.7	→	→	→	1-121-395-00	→	1-121-396-00
10	→	→	1-121-651-00	1-121-398-00	→	1-121-738-00
22	→	→	1-121-479-00	1-121-480-00	1-121-662-00	1-121-152-00
33	→	→	1-121-403-00	1-121-404-00	1-121-652-00	1-121-405-00
47	→	1-121-352-00	1-121-409-00	1-121-410-00	1-121-653-00	1-121-411-00
100	→	1-121-414-00	1-121-415-00	1-121-416-00	1-121-357-00	1-121-417-00
220	1-121-419-00	1-121-420-00	1-121-421-00	1-121-422-00	1-121-261-00	1-121-423-00
330	1-121-751-00	1-121-805-00	1-121-521-00	1-121-654-00	1-121-655-00	1-121-656-00
470	1-121-424-00	1-121-425-00	1-121-426-00	1-121-733-00	1-121-361-00	1-121-810-00
1000	–	1-121-736-00	1-121-245-00	1-121-657-00	1-121-388-00	1-123-061-00
2200	1-121-658-00	1-121-659-00	1-121-660-00	1-123-067-00	1-121-984-00	–
3300	1-121-661-00	1-123-075-00	1-123-071-00	–	–	–

CAP. (μF)	100 VOLT.	160 VOLT.	250 VOLT.	350 VOLT.
	PART No.	PART No.	PART No.	PART No.
0.47	–	–		–
1.0	1-123-249-00	1-123-252-00	1-123-003-00	1-121-168-00
2.2	1-123-250-00	1-123-026-00	–	1-123-028-00
3.3	1-121-995-00	–	1-123-004-00	1-123-006-00
4.7	1-123-255-00	1-121-246-00	1-121-759-00	1-123-007-00
10	1-121-126-00	1-121-999-00	1-123-254-00	1-123-008-00
22	1-121-996-00	1-123-253-00	1-123-005-00	1-123-022-00
33	1-121-997-00	1-121-757-00	–	–
47	1-123-251-00	1-121-919-00		–
100	1-123-084-00	–		–

CERAMIC CAPACITORS

RATING							
CAP. (pF)	50 VOLT.	CAP. (pF)	50 VOLT.	CAP. (pF)	50 VOLT.	CAP. (μF)	50 VOLT.
	PART No.		PART No.		PART No.		PART No.
0.5	1-101-837-00	22	1-102-959-00	150	1-101-361-00	0.001	1-102-074-00
0.75	1-101-586-00	24	1-102-960-00	160	1-101-367-00	0.0012	1-102-118-00
1.0	1-102-934-00	27	1-102-961-00	180	1-102-976-00	0.0015	1-102-119-00
1.5	1-101-576-00	30	1-102-962-00	200	1-102-977-00	0.0018	1-102-120-00
2.0	1-102-935-00	33	1-102-963-00	220	1-102-978-00	0.0022	1-102-121-00
3	1-102-936-00	36	1-102-964-00	240	1-102-979-00	0.0027	1-102-122-00
4	1-102-937-00	39	1-102-965-00	270	1-102-980-00	0.0033	1-102-123-00
5	1-102-942-00	43	1-102-966-00	300	1-102-981-00	0.0039	1-102-124-00
6	1-102-943-00	47	1-101-880-00	330	1-102-820-00	0.0047	1-102-125-00
7	1-102-944-00	51	1-101-882-00	360	1-102-821-00	0.0056	1-102-126-00
8	1-102-945-00	56	1-101-884-00	390	1-102-822-00	0.0068	1-102-127-00
9	1-102-946-00	62	1-101-886-00	430	1-102-823-00	0.0082	1-102-128-00
10	1-102-947-00	68	1-101-888-00	470	1-102-824-00	0.01	1-102-129-00
11	1-102-948-00	75	1-101-890-00	510	1-101-059-00	0.022	1-101-005-00
12	1-102-949-00	82	1-102-971-00	560	1-102-115-00	0.047	1-101-006-00
13	1-102-950-00	91	1-102-972-00	680	1-102-116-00		
15	1-102-951-00	100	1-102-973-00	820	1-102-117-00		
16	1-102-952-00	110	1-102-815-00				
18	1-102-953-00	120	1-102-816-00				
20	1-102-958-00	130	1-101-081-00				

0.001μF = 1,000pF

CERAMIC (SEMICONDUCTOR) CAPACITORS

CAP. (μF)	RATING → : Use the high voltage rated one.				
	25 VOLT.	50 VOLT.		25 VOLT.	50 VOLT.
	PART No.	PART No.		PART No.	PART No.
0.001	→	1-161-039-00	0.018	1-161-016-00	1-161-054-00
0.0012	→	1-161-040-00	0.022	1-161-017-00	1-161-055-00
0.0015		1-161-041-00	0.027	1-161-018-00	1-161-056-00
0.0018		1-161-042-00	0.033	1-161-019-00	1-161-057-00
0.0022		1-161-043-00	0.039	1-161-010-00	1-161-058-00
0.0027	→	1-161-044-00	0.047	1-161-021-00	1-161-059-00
0.0033	→	1-161-045-00	0.056	→	1-161-060-00
0.0039	→	1-161-046-00	0.068	→	1-161-061-00
0.0047	→	1-161-047-00	0.082	1-161-024-00	1-161-062-00
0.0056	→	1-161-048-00	0.1	1-161-025-00	1-161-063-00
0.0068	→	1-161-049-00			
0.0082	1-161-012-00	1-161-050-00			
0.01	1-161-013-00	1-161-051-00			
0.012	→	1-161-052-00			
0.015	1-161-015-00	1-161-053-00			

www.hifiengine.com

MYLAR CAPACITORS

CAP. (μF)	RATING 50 VOLT. PART No.	100 VOLT. PART No.	200 VOLT. PART No.	CAP. (μF)	50 VOLT. PART No.	100 VOLT. PART No.	200 VOLT. PART No.	CAP. (μF)	50 VOLT. PART No.	100 VOLT. PART No.	200 VOLT. PART No.
0.001	1-108-227-00	1-108-365-00	1-108-409-00	0.01	1-108-239-00	1-108-377-00	1-108-421-00	0.1	1-108-251-00	1-108-389-00	1-108-433-00
0.0012	1-108-351-00	1-108-366-00	1-108-410-00	0.012	1-108-357-00	1-108-378-00	1-108-422-00	0.12	1-108-363-00	1-108-390-00	1-108-434-00
0.0015	1-108-228-00	1-108-367-00	1-108-411-00	0.015	1-108-240-00	1-108-379-00	1-108-423-00	0.15	1-108-252-00	1-108-391-00	1-108-435-00
0.0018	1-108-352-00	1-108-368-00	1-108-412-00	0.018	1-108-358-00	1-108-380-00	1-108-424-00	0.18	1-108-364-00	1-108-392-00	1-108-436-00
0.0022	1-108-230-00	1-108-369-00	1-108-413-00	0.022	1-108-242-00	1-108-381-00	1-108-425-00	0.22	1-108-254-00	1-108-393-00	1-108-437-00
0.0027	1-108-353-00	1-108-370-00	1-108-414-00	0.027	1-108-359-00	1-108-382-00	1-108-426-00	0.27	1-108-854-00	–	–
0.0033	1-108-232-00	1-108-371-00	1-108-415-00	0.033	1-108-244-00	1-108-383-00	1-108-427-00	0.33	1-108-855-00	–	–
0.0039	1-108-354-00	1-108-372-00	1-108-416-00	0.039	1-108-360-00	1-108-384-00	1-108-428-00	0.39	1-108-856-00	–	–
0.0047	1-108-234-00	1-108-373-00	1-108-417-00	0.047	1-108-246-00	1-108-385-00	1-108-429-00	0.47	1-108-857-00	–	–
0.0056	1-108-355-00	1-108-374-00	1-108-418-00	0.056	1-108-361-00	1-108-386-00	1-108-430-00				
0.0068	1-108-237-00	1-108-375-00	1-108-419-00	0.068	1-108-249-00	1-108-387-00	1-108-431-00				
0.0082	1-108-356-00	1-108-376-00	1-108-420-00	0.082	1-108-362-00	1-108-388-00	1-108-432-00				

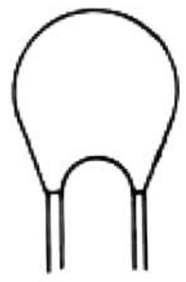

TANTALUM CAPACITORS

CAP. (μF)	RATING 3.15 VOLT. PART No.	6.3 VOLT. PART No.	10 VOLT. PART No.	16 VOLT. PART No.	20 VOLT. PART No.	25 VOLT. PART No.	35 VOLT. PART No.
					→ : Use the high voltage rated one.		
0.01					→	→	1-131-396-00
0.015						→	1-131-397-00
0.022						→	1-131-398-00
0.033						→	1-131-399-00
0.047						→	1-131-400-00
0.068					→	→	1-131-401-00
0.1					→	→	1-131-402-00
0.15					→	→	1-131-403-00
0.22					→	→	1-131-404-00
0.33					→	1-131-409-00	1-131-405-00
0.47	–	–	–	–	1-131-412-00	→	1-131-406-00
0.68	–	–	–	1-131-415-00	→	1-131-410-00	1-131-407-00
1.0	–	–	1-131-418-00	–	1-131-413-00	→	1-131-408-00
1.5	–	1-131-421-00	–	1-131-416-00	→	1-131-411-00	1-131-348-00
2.2	1-131-424-00	–	1-131-419-00	–	1-131-414-00	1-131-355-00	1-131-349-00
3.3	–	1-131-422-00	–	1-131-417-00	1-131-362-00	1-131-356-00	1-131-350-00
4.7	1-131-425-00	–	1-131-420-00	1-131-369-00	1-131-363-00	1-131-357-00	1-131-351-00
6.8	–	1-131-423-00	1-131-376-00	1-131-370-00	1-131-364-00	1-131-358-00	1-131-352-00
10	1-131-426-00	1-131-383-00	1-131-377-00	1-131-371-00	1-131-365-00	1-131-359-00	1-131-353-00
15	1-131-390-00	1-131-384-00	1-131-378-00	1-131-372-00	1-131-366-00	1-131-360-00	–
22	1-131-391-00	1-131-385-00	1-131-379-00	1-131-373-00	1-131-367-00		
33	1-131-392-00	1-131-386-00	1-131-380-00	1-131-374-00			
47	1-131-393-00	1-131-387-00	1-131-381-00	–			
68	1-131-394-00	1-131-388-00	–	–			
100	1-131-395-00	–	–	–			

TANTALUM CAPACITORS

CAP. (μF)	RATING 3 VOLT. PART No.	6.3 VOLT. PART No.	10 VOLT. PART No.	16 VOLT. PART No.	20 VOLT. PART No.	35 VOLT. PART No.
0.033						1-131-273-00
0.047						1-131-274-00
0.068						1-131-275-00
0.1						1-131-276-00
0.15						1-131-277-00
0.22			–	–	1-131-262-00	1-131-278-00
0.33			–	–	1-131-263-00	1-131-279-00
0.47			1-131-169-00	–	1-131-264-00	1-131-280-00
0.68			–	1-131-258-00	1-131-265-00	1-131-281-00
1.0			1-131-254-00	–	1-131-266-00	1-131-282-00
1.5		1-131-250-00	–	–	1-131-267-00	1-131-283-00
2.2		–	–	1-131-259-00	1-131-268-00	1-131-284-00
3.3		–	1-131-255-00	–	1-131-269-00	–
4.7		1-131-251-00	1-131-171-00	–	1-131-270-00	–
6.8		–	–	1-131-260-00	1-131-271-00	–
10	–	–	1-131-256-00	–	1-131-272-00	–
15	–	1-131-252-00	–	1-131-261-00		
22	–	–	1-131-257-00	–		
33	1-131-176-00	1-131-253-00	1-131-173-00	–		
47	1-131-288-00	1-131-174-00	–	–		
100	1-131-177-00					

www.hifiengine.com

1/16 WATT CARBON RESISTOR

Ω	Part No.	Ω	Part No.	Ω	Part No.	Ω	Part No.	Ω	Part No.	Ω	Part No.	Ω	Part No.
2.0	—	13	—	91	1-210-354-00	620	1-210-367-00	4.3k	1-209-772-00	30k	1-210-380-00	200k	1-210-839-00
2.2	—	15	—	100	1-210-355-00	680	1-210-106-00	4.7k	1-209-773-00	33k	1-210-381-00	220k	1-210-840-00
2.4	—	16	—	110	1-210-356-00	750	1-210-107-00	5.1k	1-209-774-00	36k	1-210-394-00	240k	—
2.7	—	18	1-211-688-00	120	1-210-357-00	820	1-210-108-00	5.6k	1-209-775-00	39k	1-210-382-00	270k	1-210-841-00
3.0	—	20	—	130	1-210-358-00	910	1-210-368-00	6.2k	1-209-776-00	43k	1-210-383-00	300k	—
3.3	—	22	—	150	1-210-102-00	1.0k	1-204-122-00	6.8k	1-209-777-00	47k	1-210-384-00	330k	1-210-842-00
3.6	—	24	—	160	1-210-359-00	1.1k	1-210-369-00	7.5k	1-209-778-00	51k	1-210-385-00	360k	—
3.9	—	27	—	180	1-210-360-00	1.2k	1-209-765-00	8.2k	1-209-779-00	56k	1-210-386-00	390k	1-210-843-00
4.3	—	30	1-210-845-00	200	1-210-361-00	1.3k	1-210-370-00	9.1k	1-209-780-00	62k	1-210-387-00	430k	—
4.7	—	33	1-210-846-00	220	1-210-362-00	1.5k	1-209-766-00	10k	1-209-781-00	68k	1-210-388-00	470k	1-210-844-00
5.1	—	36	1-210-847-00	240	1-209-762-00	1.6k	1-210-371-00	11k	1-210-374-00	75k	1-210-389-00	510k	—
5.6	—	39	1-210-848-00	270	1-210-363-00	1.8k	1-209-878-00	12k	1-210-111-00	82k	1-210-390-00	560k	1-211-695-00
6.2	—	43	1-210-849-00	300	1-210-364-00	2.0k	1-209-767-00	13k	1-210-375-00	91k	1-210-391-00	620k	—
6.8	—	47	1-210-395-00	330	1-209-763-00	2.2k	1-209-768-00	15k	1-210-112-00	100k	1-210-115-00	680k	1-211-696-00
7.5	—	51	1-210-101-00	360	1-210-103-00	2.4k	1-209-769-00	16k	1-210-376-00	110k	—	750k	—
8.2	—	56	1-210-351-00	390	1-210-365-00	2.7k	1-209-770-00	18k	1-210-113-00	120k	1-210-836-00	820k	1-211-698-00
9.1	—	62	1-210-352-00	430	1-210-366-00	3.0k	1-210-372-00	20k	1-210-377-00	130k	—	910k	—
10	—	68	1-210-353-00	470	1-209-764-00	3.3k	1-204-123-00	22k	1-210-114-00	150k	1-210-837-00	1 M	—
11	—	75	1-210-392-00	510	1-210-104-00	3.6k	1-210-373-00	24k	1-210-378-00	160k	—		
12	—	82	1-210-393-00	560	1-210-105-00	3.9k	1-209-771-00	27k	1-210-379-00	180k	1-210-838-00		

1/8 WATT CARBON RESISTOR

Ω	Part No.	Ω	Part No.	Ω	Part No.	Ω	Part No.	Ω	Part No.	Ω	Part No.	Ω	Part No.
2.0	—	13	1-246-821-00	91	1-246-831-00	620	1-246-841-00	4.3k	1-246-851-00	30k	1-246-861-00	200k	1-246-871-00
2.2	1-246-751-00	15	1-246-761-00	100	1-246-771-00	680	1-246-781-00	4.7k	1-246-791-00	33k	1-246-801-00	220k	1-246-811-00
2.4	—	16	1-246-822-00	110	1-246-832-00	750	1-246-842-00	5.1k	1-246-852-00	36k	1-246-862-00	240k	1-247-054-00
2.7	1-246-752-00	18	1-246-762-00	120	1-246-772-00	820	1-246-782-00	5.6k	1-246-792-00	39k	1-246-802-00	270k	1-247-046-00
3.0	—	20	1-246-823-00	130	1-246-833-33	910	1-246-843-00	6.2k	1-246-853-00	43k	1-246-863-00	300k	1-247-055-00
3.3	1-246-753-00	22	1-246-763-00	150	1-246-773-00	1.0k	1-246-783-00	6.8k	1-246-793-00	47k	1-246-803-00	330k	1-247-047-00
3.6	—	24	1-246-824-00	160	1-246-834-00	1.1k	1-246-844-00	7.5k	1-246-854-00	51k	1-246-864-00	360k	1-247-056-00
3.9	1-246-754-00	27	1-246-764-00	180	1-246-774-00	1.2k	1-246-784-00	8.2k	1-246-794-00	56k	1-246-804-00	390k	1-247-048-00
4.3	—	30	1-246-825-00	200	1-246-835-00	1.3k	1-246-845-00	9.1k	1-246-855-00	62k	1-246-865-00	430k	1-247-057-00
4.7	1-246-755-00	33	1-246-765-00	220	1-246-775-00	1.5k	1-246-785-00	10k	1-246-795-00	68k	1-246-805-00	470k	1-247-049-00
5.1	—	36	1-246-826-00	240	1-246-836-00	1.6k	1-246-846-00	11k	1-246-856-00	75k	1-246-866-00	510k	1-247-058-00
5.6	1-246-756-00	39	1-246-766-00	270	1-246-776-00	1.8k	1-246-786-00	12k	1-246-796-00	82k	1-246-806-00	560k	1-247-050-00
6.2	—	43	1-246-827-00	300	1-246-837-00	2.0k	1-246-847-00	13k	1-246-857-00	91k	1-246-867-00	620k	1-247-059-00
6.8	1-246-757-00	47	1-246-767-00	330	1-246-777-00	2.2k	1-246-787-00	15k	1-246-797-00	100k	1-246-807-00	680k	1-247-051-00
7.5	1-246-818-00	51	1-246-828-00	360	1-246-838-00	2.4k	1-246-848-00	16k	1-246-858-00	110k	1-246-868-00	750k	1-247-060-00
8.2	1-246-758-00	56	1-246-768-00	390	1-246-778-00	2.7k	1-246-788-00	18k	1-246-798-00	120k	1-246-808-00	820k	1-247-052-00
9.1	1-246-819-00	62	1-246-829-00	430	1-246-839-00	3.0k	1-246-849-00	20k	1-246-859-00	130k	1-246-869-00	910k	1-247-061-00
10	1-246-759-00	68	1-246-769-00	470	1-246-779-00	3.3k	1-246-789-00	22k	1-246-799-00	150k	1-246-809-00	1 M	1-247-053-00
11	1-246-820-00	75	1-246-830-00	510	1-246-840-00	3.6k	1-246-850-00	24k	1-246-860-00	160k	1-246-870-00		
12	1-246-760-00	82	1-246-770-00	560	1-246-780-00	3.9k	1-246-790-00	27k	1-246-800-00	180k	1-246-810-00		

www.hifiengine.com

1/4 WATT CARBON RESISTORS

Ω	Part No.	Ω	Part No.	Ω	Part No.	Ω	Part No.	Ω	Part No.	Ω	Part No.	Ω	Part No.
1.0	1-246-401-00	10	1-246-425-00	100	1-246-449-00	1.0k	1-246-473-00	10k	1-246-497-00	100k	1-246-521-00	1.0M	1-246-545-00
1.1	1-246-402-00	11	1-246-426-00	110	1-246-450-00	1.1k	1-246-474-00	11k	1-246-498-00	110k	1-246-522-00	1.1M	1-210-814-00
1.2	1-246-403-00	12	1-246-427-00	120	1-246-451-00	1.2k	1-246-475-00	12k	1-246-499-00	120k	1-246-523-00	1.2M	1-210-815-00
1.3	1-246-404-00	13	1-246-428-00	130	1-246-452-00	1.3k	1-246-476-00	13k	1-246-500-00	130k	1-246-524-00	1.3M	1-210-816-00
1.5	1-246-405-00	15	1-246-429-00	150	1-246-453-00	1.5k	1-246-477-00	15k	1-246-501-00	150k	1-246-525-00	1.5M	1-210-817-00
1.6	1-246-406-00	16	1-246-430-00	160	1-246-454-00	1.6k	1-246-478-00	16k	1-246-502-00	160k	1-246-526-00	1.6M	1-210-818-00
1.8	1-246-407-00	18	1-246-431-00	180	1-246-455-00	1.8k	1-246-479-00	18k	1-246-503-00	180k	1-246-527-00	1.8M	1-210-819-00
2.0	1-246-408-00	20	1-246-432-00	200	1-246-456-00	2.0k	1-246-480-00	20k	1-246-504-00	200k	1-246-528-00	2.0M	1-210-820-00
2.2	1-246-409-00	22	1-246-433-00	220	1-246-457-00	2.2k	1-246-481-00	22k	1-246-505-00	220k	1-246-529-00	2.2M	1-210-821-00
2.4	1-246-410-00	24	1-246-434-00	240	1-246-458-00	2.4k	1-246-482-00	24k	1-246-506-00	240k	1-246-530-00	2.4M	1-244-754-00
2.7	1-246-411-00	27	1-246-435-00	270	1-246-459-00	2.7k	1-246-483-00	27k	1-246-507-00	270k	1-246-531-00	2.7M	1-244-755-00
3.0	1-246-412-00	30	1-246-436-00	300	1-246-460-00	3.0k	1-246-484-00	30k	1-246-508-00	300k	1-246-532-00	3.0M	1-244-756-00
3.3	1-246-413-00	33	1-246-437-00	330	1-246-461-00	3.3k	1-246-485-00	33k	1-246-509-00	330k	1-246-533-00	3.3M	1-244-757-00
3.6	1-246-414-00	36	1-246-438-00	360	1-246-462-00	3.6k	1-246-486-00	36k	1-246-510-00	360k	1-246-534-00	3.6M	1-244-758-00
3.9	1-246-415-00	39	1-246-439-00	390	1-246-463-00	3.9k	1-246-487-00	39k	1-246-511-00	390k	1-246-535-00	3.9M	1-244-759-00
4.3	1-246-416-00	43	1-246-440-00	430	1-246-464-00	4.3k	1-246-488-00	43k	1-246-512-00	430k	1-246-536-00	4.3M	1-244-760-00
4.7	1-246-417-00	47	1-246-441-00	470	1-246-465-00	4.7k	1-246-489-00	47k	1-246-513-00	470k	1-246-537-00	4.7M	1-244-761-00
5.1	1-246-418-00	51	1-246-442-00	510	1-246-466-00	5.1k	1-246-490-00	51k	1-246-514-00	510k	1-246-538-00	5.1M	1-244-762-00
5.6	1-246-419-00	56	1-246-443-00	560	1-246-467-00	5.6k	1-246-491-00	56k	1-246-515-00	560k	1-246-539-00		
6.2	1-246-420-00	62	1-246-444-00	620	1-246-468-00	6.2k	1-246-492-00	62k	1-246-516-00	620k	1-246-540-00		
6.8	1-246-421-00	68	1-246-445-00	680	1-246-469-00	6.8k	1-246-493-00	68k	1-246-517-00	680k	1-246-541-00		
7.5	1-246-422-00	75	1-246-446-00	750	1-246-470-00	7.5k	1-246-494-00	75k	1-246-518-00	750k	1-246-542-00		
8.2	1-246-423-00	82	1-246-447-00	820	1-246-471-00	8.2k	1-246-495-00	82k	1-246-519-00	820k	1-246-543-00		
9.1	1-246-424-00	91	1-246-448-00	910	1-246-472-00	9.1k	1-246-496-00	91k	1-246-520-00	910k	1-246-544-00		

HARDWARE NOMENCLATURE

Screw: – P 3 x 10

- *L: Length in mm*
- *D: Diameter in mm*
- *Type of head*
- *Indicated slotted-head only. Unless otherwise indicated, it means cross-recessed head (Phillips type).*

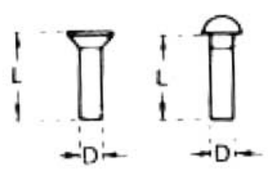

Nut, Washer, Retaining ring: N 3

- *Diameter of usable screw or shaft*
- *Reference designation*

Reference Designation	Shape	Description	Remarks
		SCREWS	
P		pan-head screw	binding-head (B) screw for replacement
PWH		pan-head screw with washer face	binding-head (B) screw and flat washer for replacement
PS PSP		pan-head screw with spring washer	binding-head (B) screw and spring washer for replacement
PSW PSPW		pan-head screw with spring and flat washers	binding-head (B) screw and spring and flat washers for replacement
R		round-head screw	binding-head (B) screw for replacement
K		flat-countersunk-head screw	
RK		oval-countersunk-head screw	
B		binding-head screw	
T		truss-head screw	binding-head (B) screw for replacement
F		flat-fillister-head screw	
RF		fillister-head screw	
BV		brazer-head screw	

Reference Designation	Shape	Description	Remarks
		SELF-TAPPING SCREWS	
TA		self-tapping screw	ex: TA, P 3 x 10
PTP		pan-head self-tapping screw	binding-head self-tapping (TA, B) screw for replacement
PTPWH		pan-head self-tapping screw with washer face	binding-head self tapping (TA, B) screw and flat washer for replacement
PTTWH		pan-head thread-rolling screw with washer face	binding-head (B) screw and flat washer for replacement
		SET SCREWS	
SC		set screw	
SC		hexagon-socket set screw	ex: SC 2.6 x 4, hexagon socket
		NUT	
N		nut	
		WASHERS	
W		flat washer	
SW		spring washer	
LW		internal-tooth lock washer	ex: LW3, internal
LW		external-tooth lock washer	ex: LW3, external
		RETAINING RINGS	
E		retaining ring	
G		grip-type retaining ring	

www.hifiengine.com

Sony Corporation
© 1981
9-950-645-11

81G0687-1
Printed in Japan

www.hifiengine.com